www.bufanxiu.com

THIS DRAWING AND SPECIFICATIONS, HEREIN, ARE THE PROPERTY OF INVENTEC CORPORATION AND SHALL NOT BE REPODUCED, COPIED, OR USED IN WHOLE OR IN PART AS THE BASIS FOR THE MANUFACTURE OR SALE OF ITEMS WITHOUT WRITTEN PERMISSION, INVENTEC CORPORATION 2009 ALL RIGHT RESERVED

HSF Property : **RoHS**

Diesel 10 UMA

PV_BUILD

2010.02.02

DATE	CHANGE NO.	REV

	EE	DATE	POWER	DATE
DRAWER				
DESIGN				
CHECK				
RESPONSIBLE				

SIZE = 3 VER :

FILE NAME : XXXX-XXXXXX-XX

P/N XXXXXXXXXXXX

INVENTEC

TITLE ***Diesel10 UMA***

SIZE	CODE	DOC. NUMBER	REV
A3	**CS**	***1310A2326601-0-MTR***	***A01***

SHEET **1** OF **61**

www.bufanxiu.com

TABLE OF CONTENTS

PAGE

5- DC& BATTERY CHARGER
6- SELECT & BATTERY CONN
7- SYSTEM POWER(3V/5V)
8- SYSTEM POWER(+V1.05M_LAN/+V1.5)
9- SYSTEM POWER(+V1.8S)
10- SYSTEM POWER(+VCCP)
11- CPU POWER(VCC_CORE)
12- GRAPHIC POWER(+VGFX_CORE)
13- POWER(SLEEP)
14- POWER(SEQUENCE)
15- CLOCK_GENERATOR
16- FAN
17-ARRANDALE1
18-ARRANDALE2
19-ARRANDALE3 & XDP
20-ARRANDALE4
21-ARRANDALE5
22-ARRANDALE6
23- DDR3-DIMM0
24- DDR3-DIMM1
25- PCH1
26- PCH2
27- PCH3
28- PCH4
29- PCH5
30- PCH6
31- PCH7-POWER
32- PCH8-POWER
33- PCH9

PAGE

34- CRT / DISPLAY PORT CNTR
35- LCM & CAMERA
36- SATA & ODD CNTR
37- LEFT USB & ESATA COMBO
38- BLUE TOOTH & FINGER PRINTER CNTR
39- ACCELEMETOR
40- KBC & SPI
41- KEYBOARD & STICK POINT
42- SUPER I/O
43- TPM & MDC
44- LAN INTERFACE
45- LAN RJ45 CNTR
46- WWAN & WLAN & SIM
47- DOCKING CNTR
48- CNTR FOR DAUGHTER BOARD
49- SCREW & EMI
50- CARD READER DB-1
51- CARD READER DB-2
52- ODD DB
53- SERIAL DB
54- POWER BUTTON DB
55- EXPRESS CARD & Audio DB-1
56- EXPRESS CARD & Audio DB-2
57- EXPRESS CARD & Audio DB-3
58- EXPRESS CARD & Audio DB-4
59- EXPRESS CARD & Audio DB-5
60- CAP SENSOR BOARD DB(SMSC) 14"
61- CAP SENSOR BOARD DB(SMSC) 15"

www.bufanxiu.com

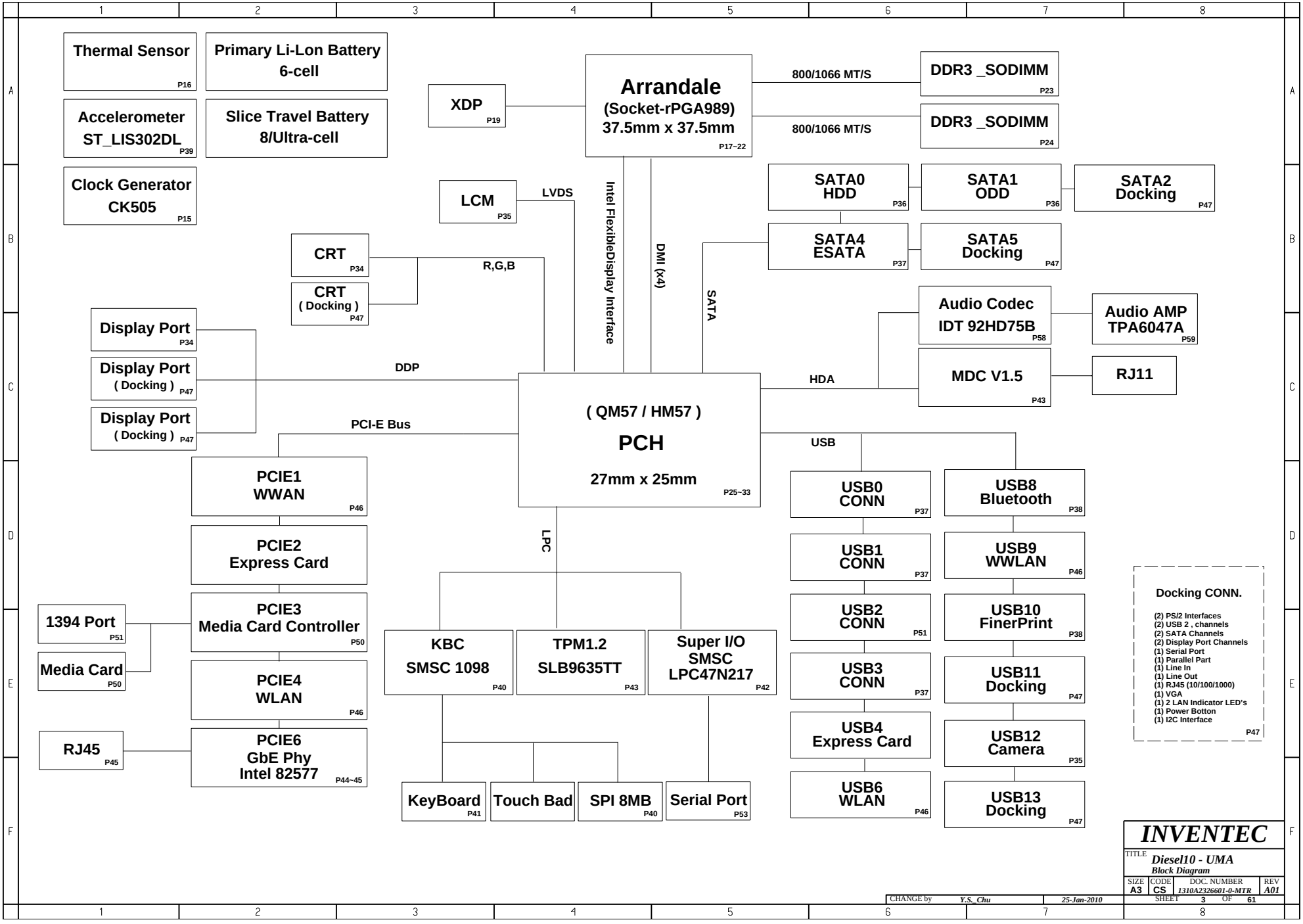

www.bufanxiu.com

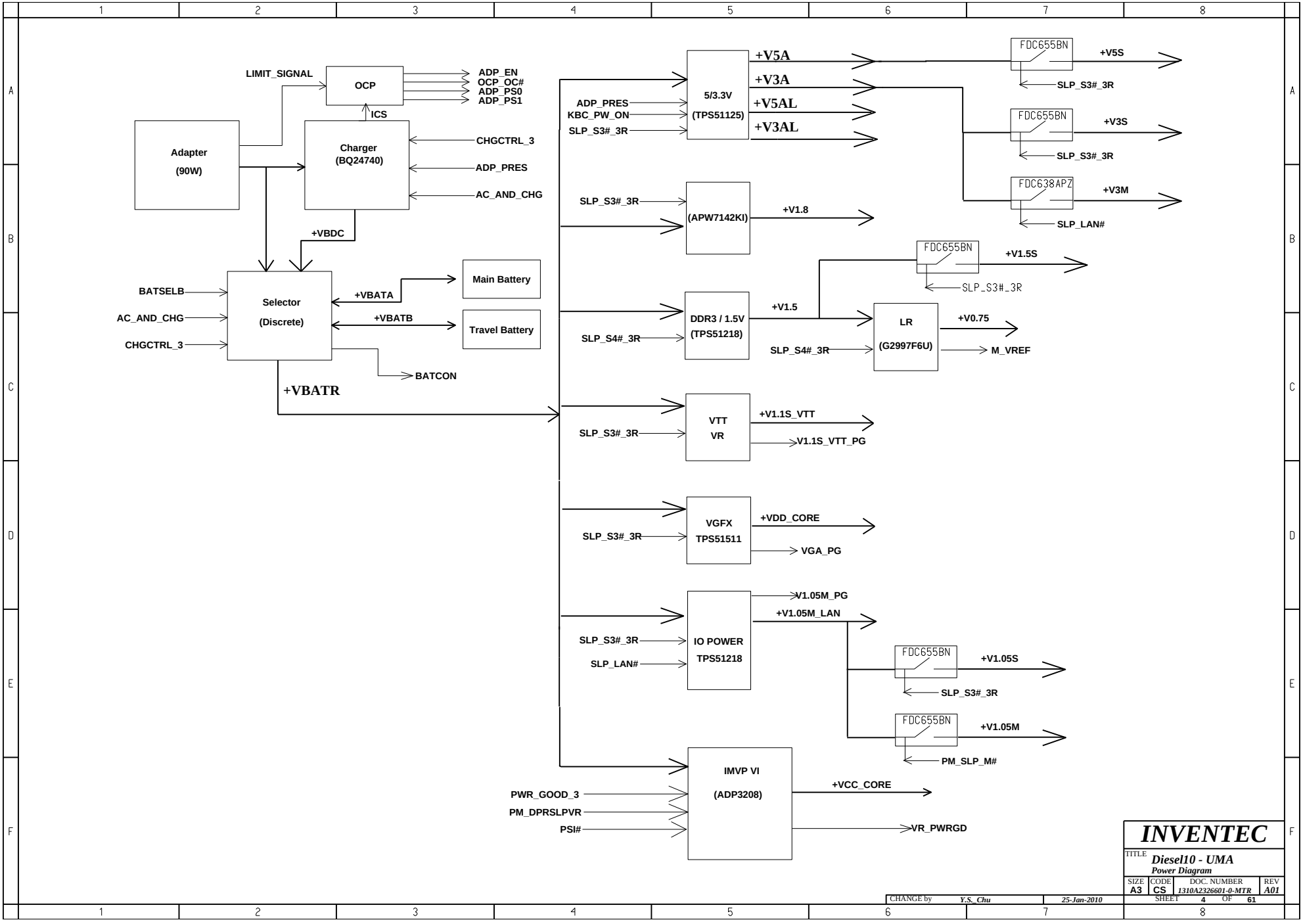

www.bufanxiu.com

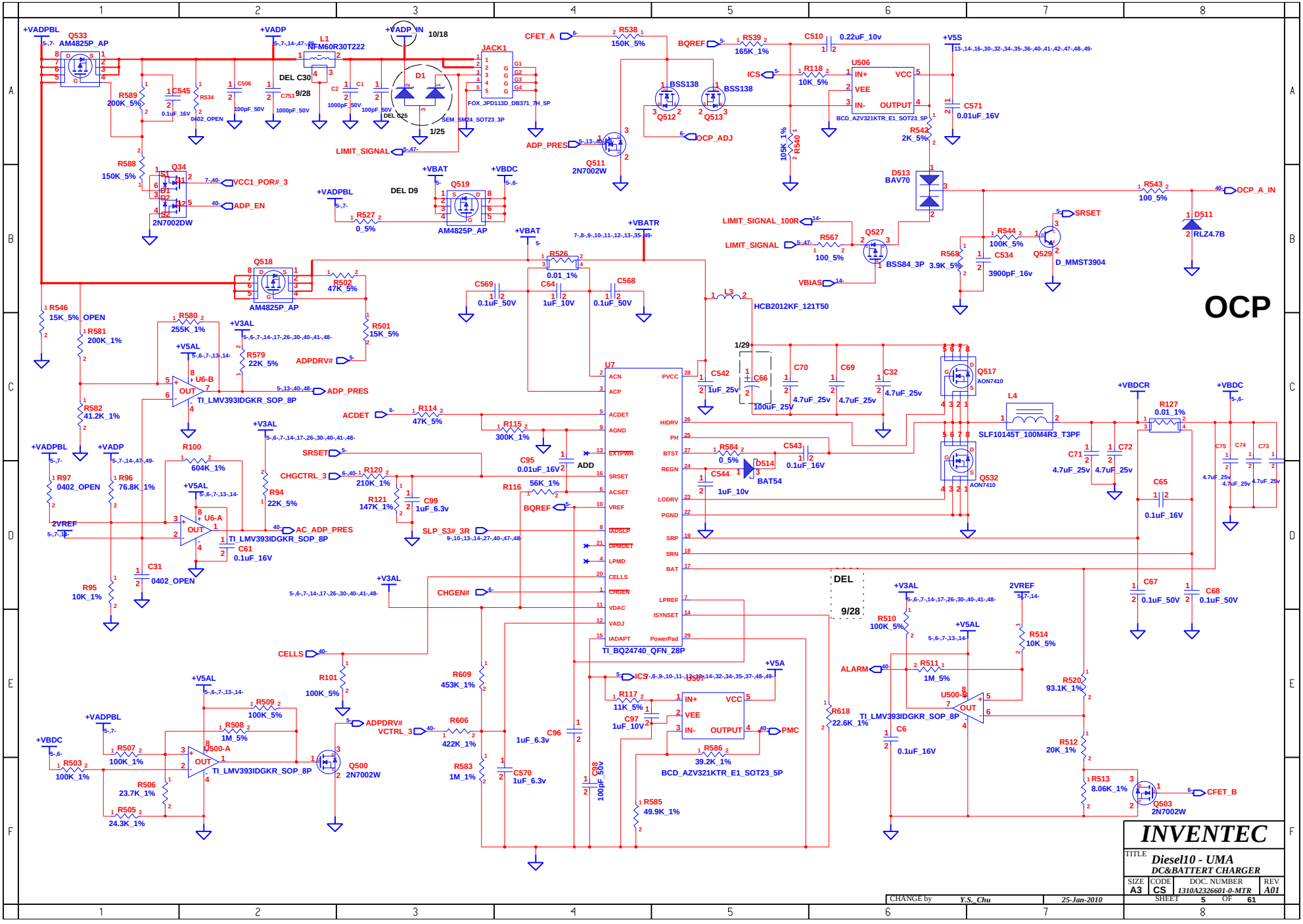

www.bufanxiu.com

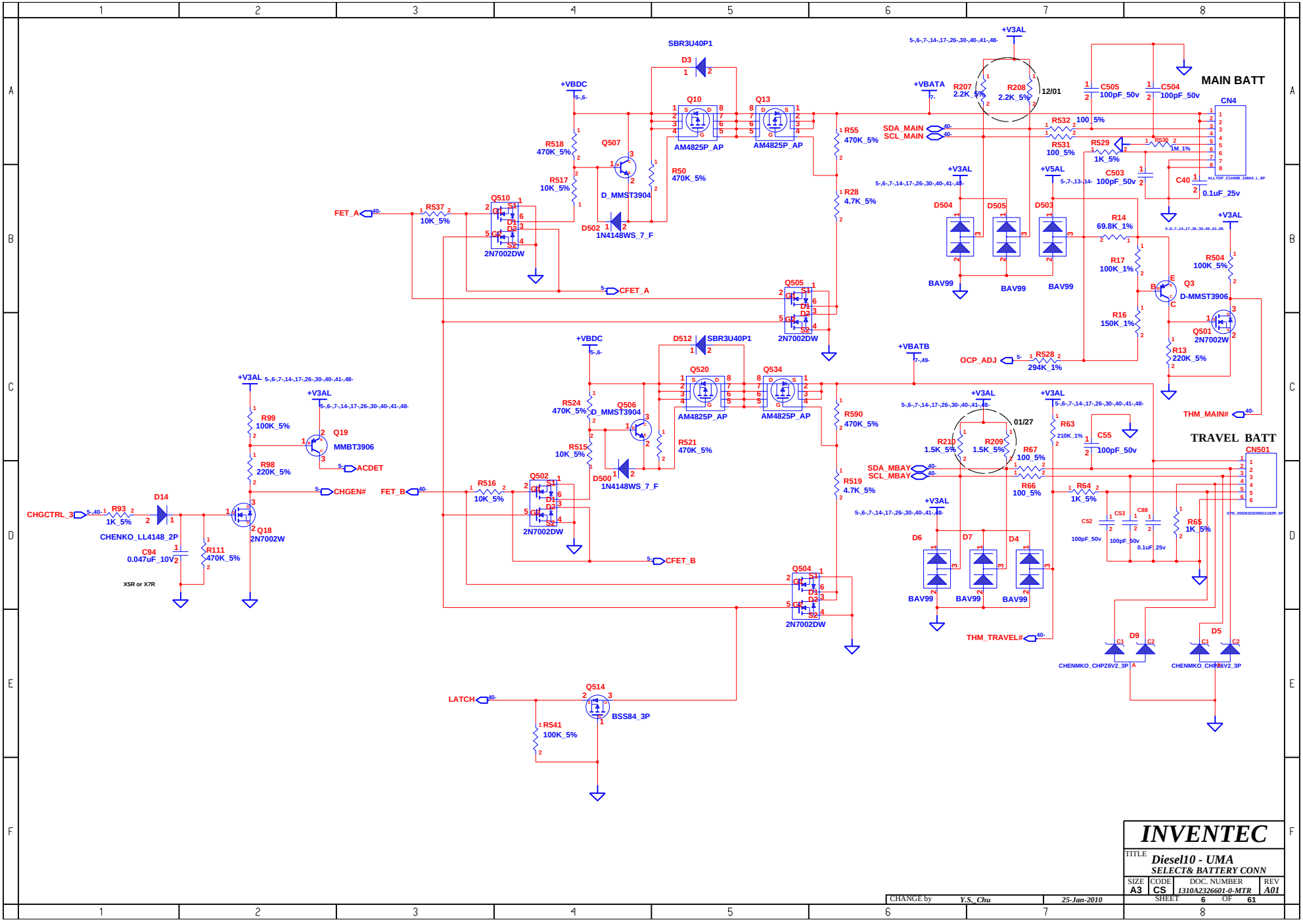

INVENTEC

TITLE: *Diesel10 - UMA*
SELECT& BATTERY CONN

SIZE	CODE	DOC. NUMBER	REV
A3	CS	1310A2326601-0-MTR	A01

SHEET 6 OF 61

CHANGE by Y.S._Chu 25-Jan-2010

www.bufanxiu.com

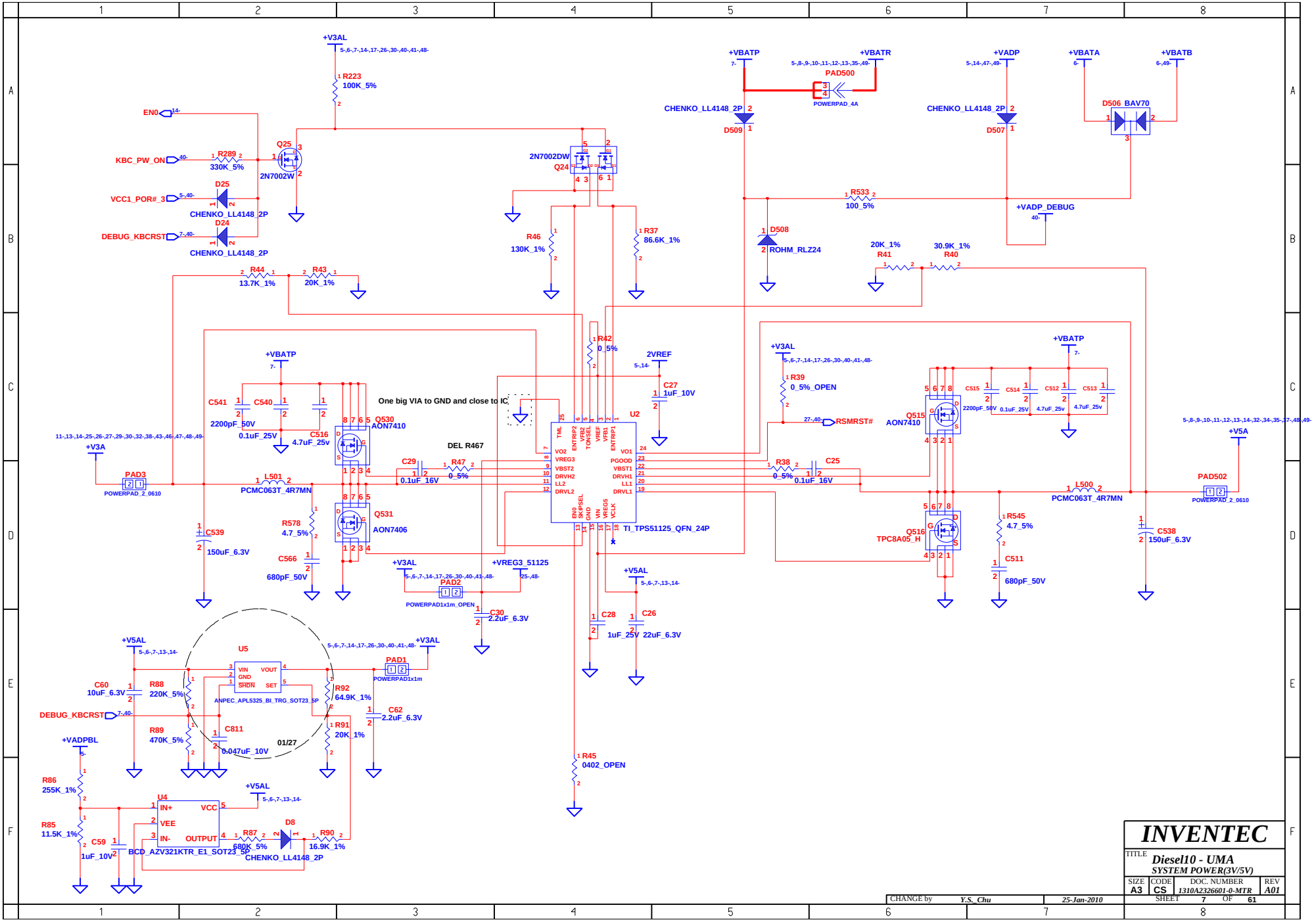

INVENTEC

TITLE Diesel10 - UMA
SYSTEM POWER(3V/5V)

SIZE	CODE	DOC. NUMBER	REV
A3	CS	1310A2326601-0-MTR	A01

SHEET 7 OF 61

CHANGE by Y.S._Chu 25-Jan-2010

www.bufanxiu.com

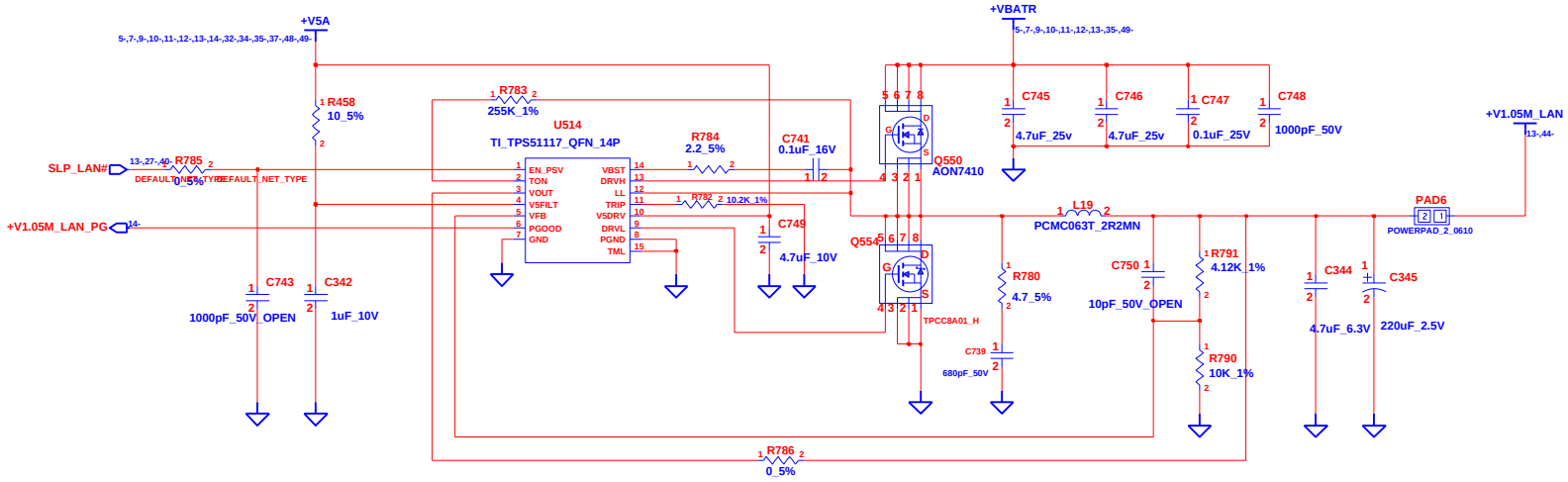

CHANGE by	Y.S._Chu	25-Jan-2010	

INVENTEC

TITLE: *Diesel10 - UMA*

SYSTEM POWER(+V1.05M_LAN/+V1.5)

SIZE	CODE	DOC. NUMBER	REV
A3	CS	1310A2326601-0-MTR	A01

SHEET 8 OF 61

www.bufanxiu.com

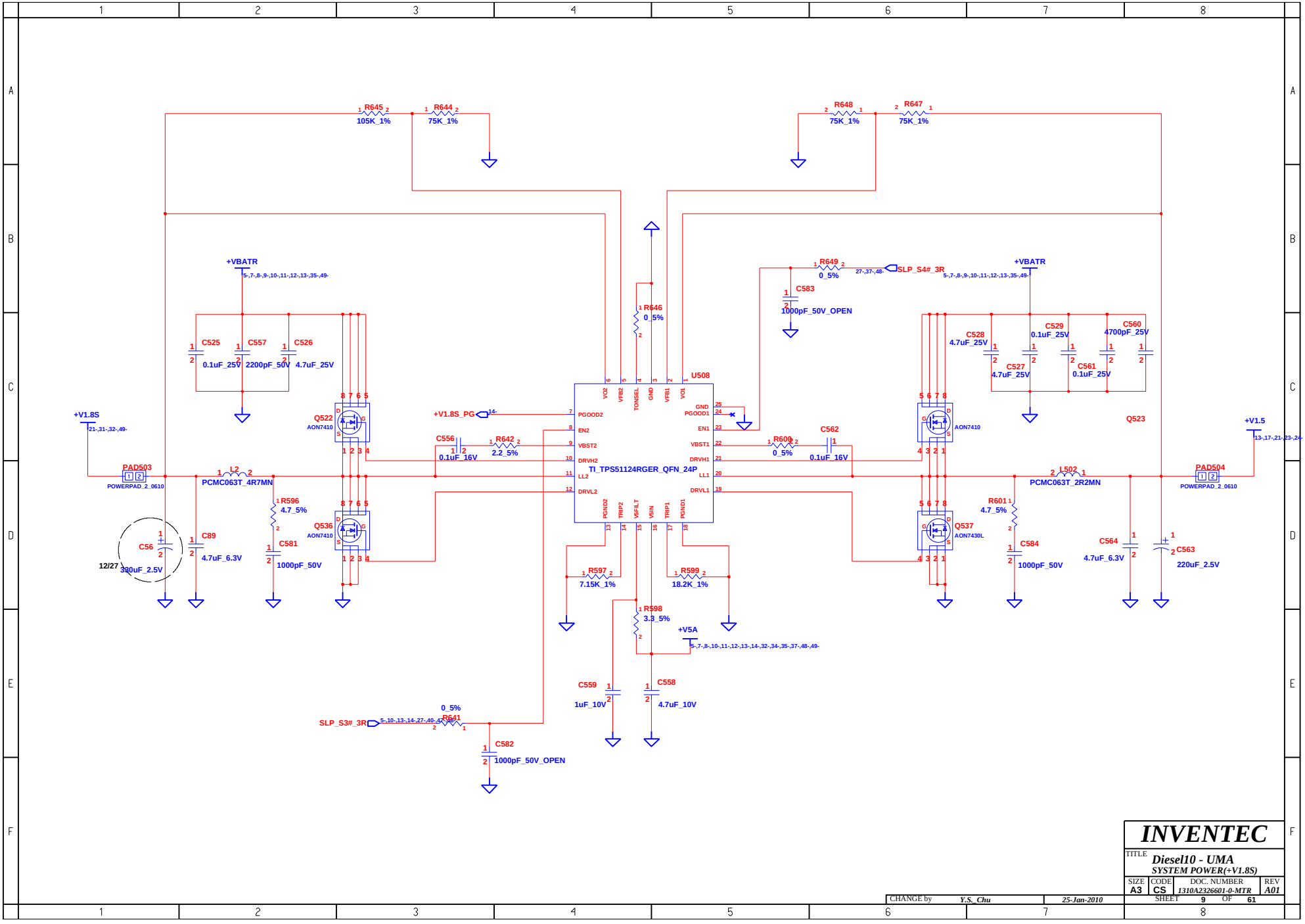

INVENTEC			
TITLE	Diesel10 - UMA SYSTEM POWER(+V1.8S)		
SIZE A3	CODE CS	DOC. NUMBER 1310A2326601-0-MTR	REV A01
CHANGE by Y.S._Chu	25-Jan-2010	SHEET 9 OF 61	

www.bufanxiu.com

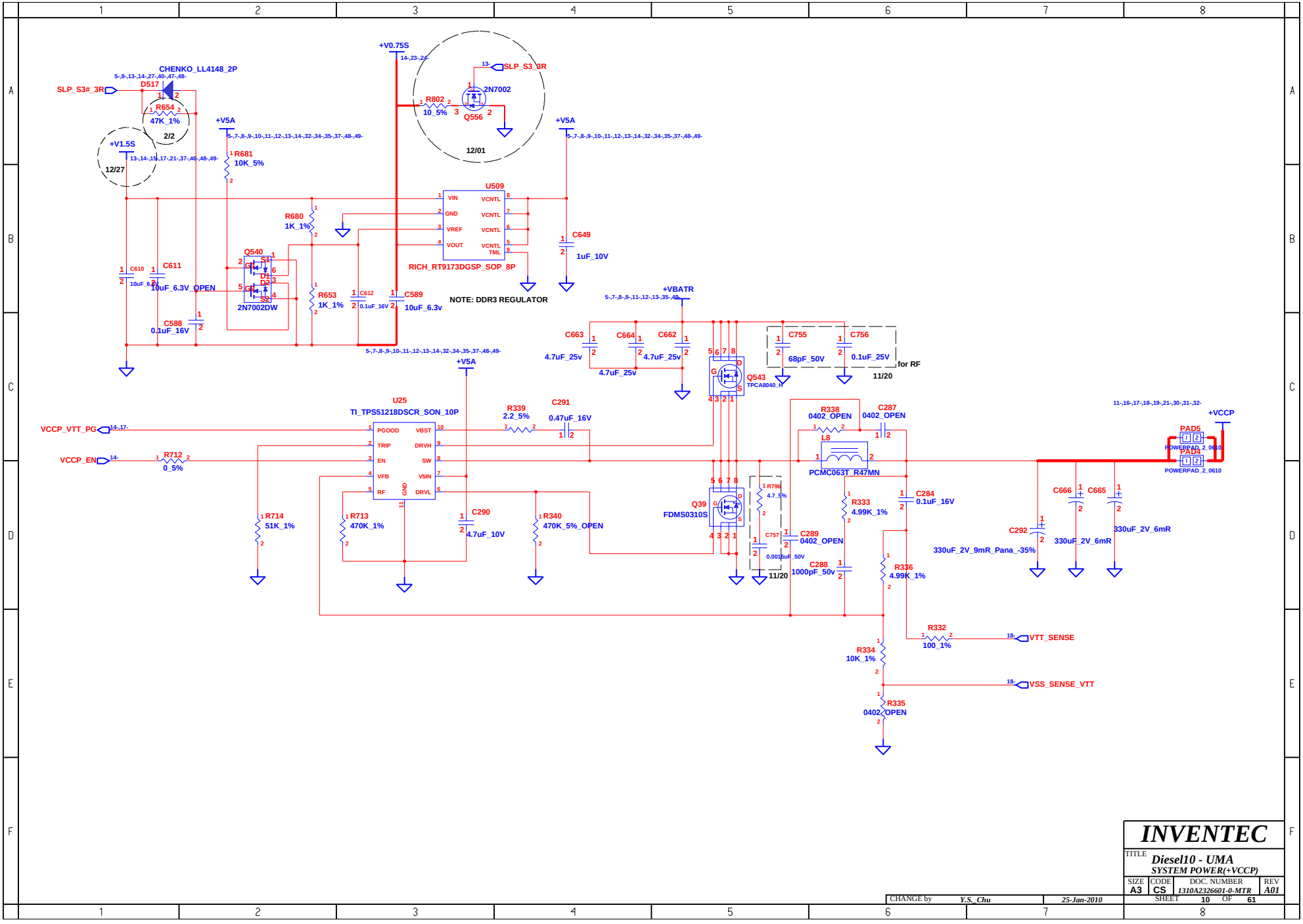

INVENTEC			
TITLE: Diesel10 - UMA SYSTEM POWER(+VCCP)			
SIZE: A3	CODE: CS	DOC. NUMBER: 1310A2326601-0-MTR	REV: A01
CHANGE by: Y.S._Chu	25-Jan-2010	SHEET 10 OF 61	

www.bufanxiu.com

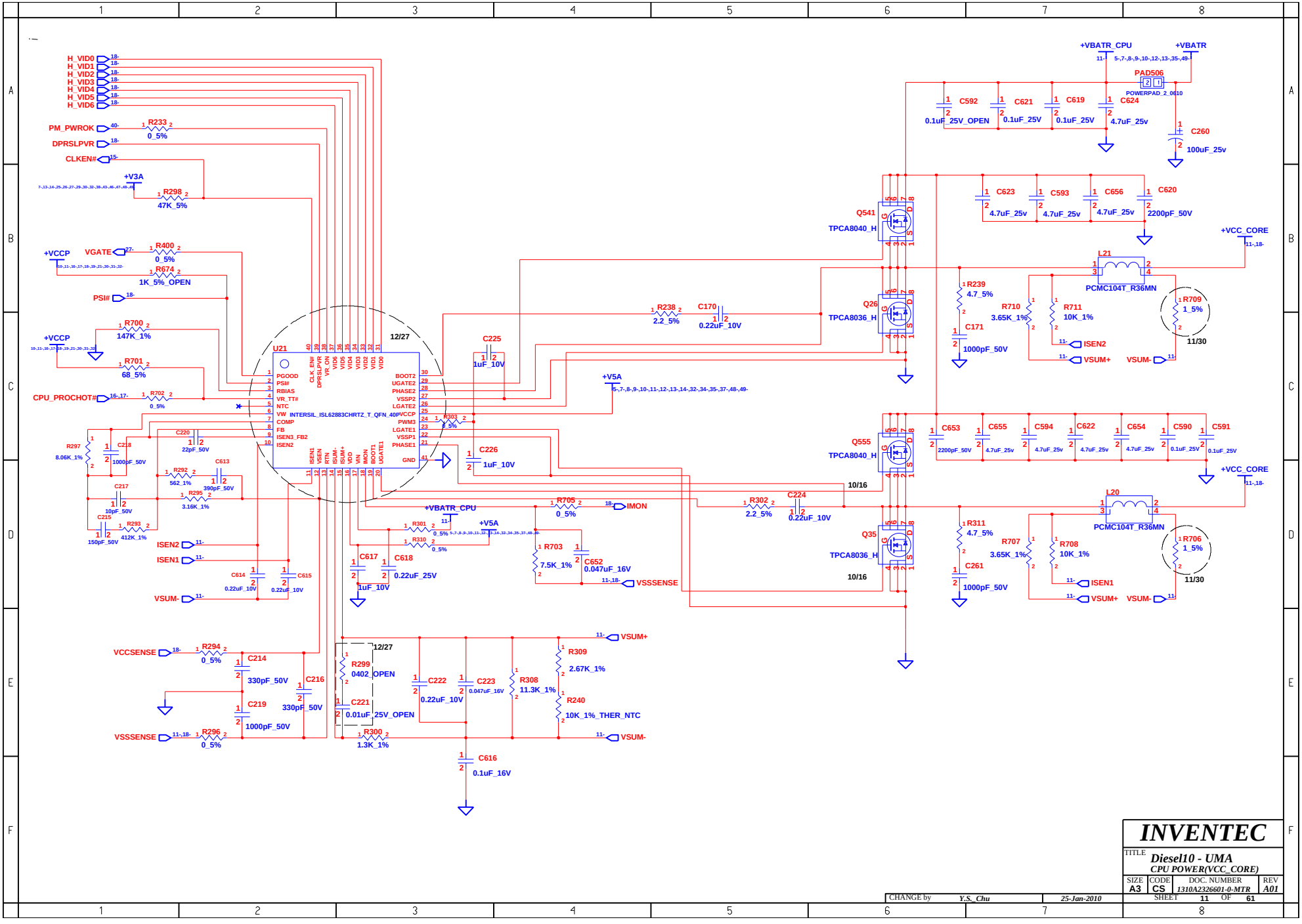

CHANGE by	Y.S._Chu	25-Jan-2010	

INVENTEC

TITLE: *Diesel10 - UMA*
CPU POWER(VCC_CORE)

SIZE	CODE	DOC. NUMBER	REV
A3	CS	1310A2326601-0-MTR	A01

SHEET 11 OF 61

www.bufanxiu.com

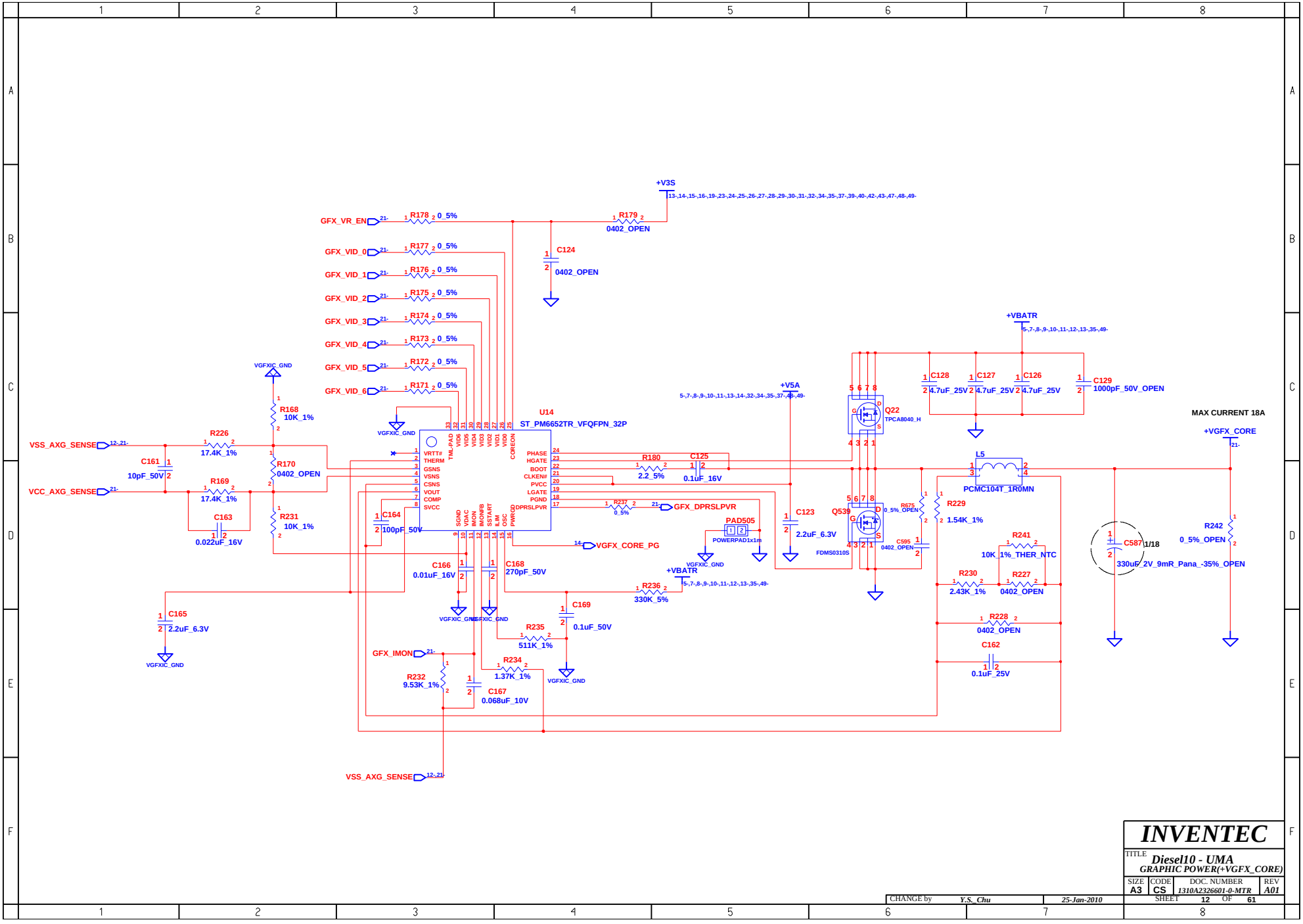

INVENTEC			
TITLE: Diesel10 - UMA GRAPHIC POWER(+VGFX_CORE)			
SIZE A3	CODE CS	DOC. NUMBER 1310A2326601-0-MTR	REV A01
CHANGE by Y.S._Chu	25-Jan-2010	SHEET 12 OF 61	

www.bufanxiu.com

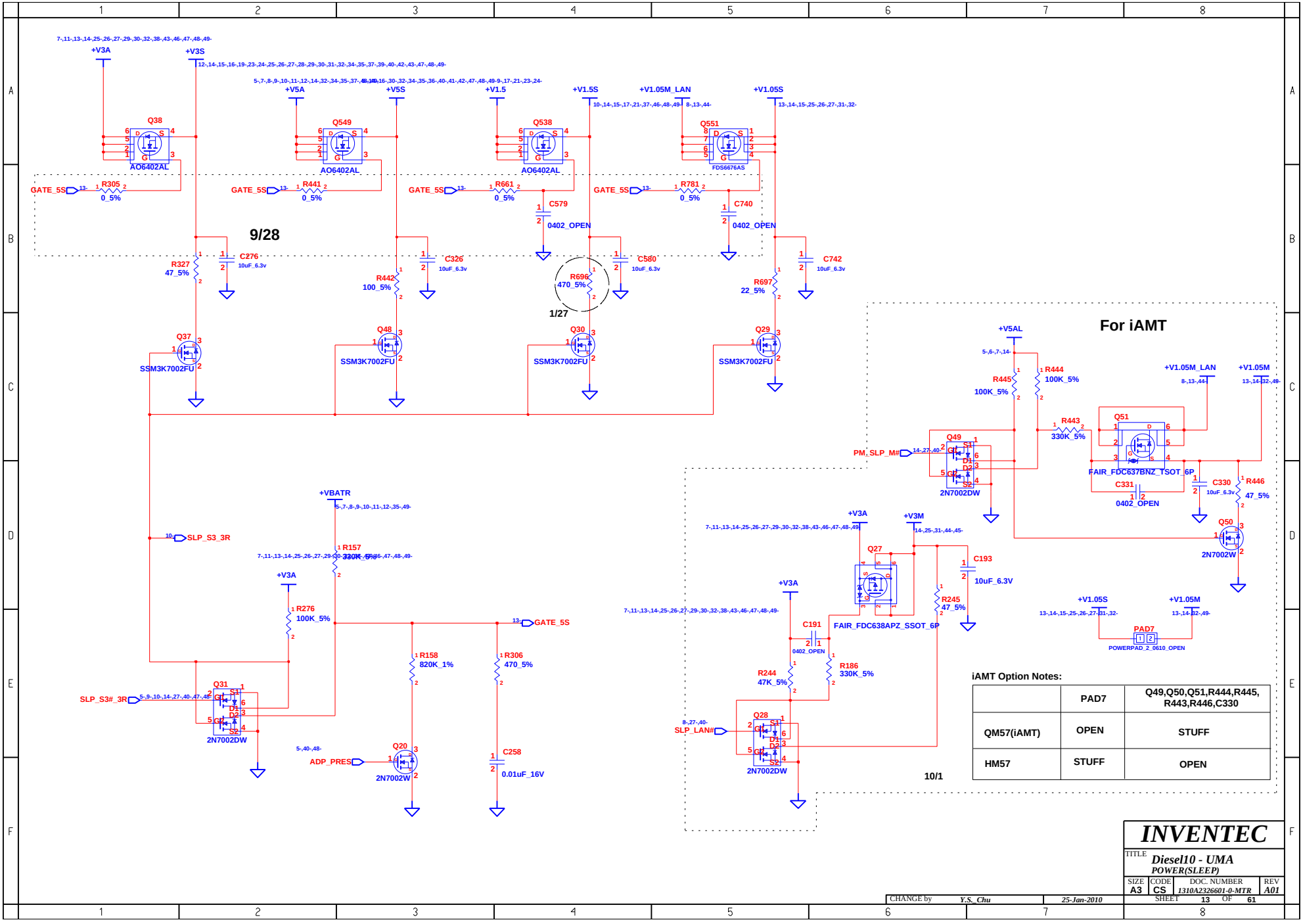

iAMT Option Notes:

	PAD7	Q49,Q50,Q51,R444,R445,R443,R446,C330
QM57(iAMT)	OPEN	STUFF
HM57	STUFF	OPEN

INVENTEC

TITLE: *Diesel10 - UMA*
POWER(SLEEP)

SIZE	CODE	DOC. NUMBER	REV
A3	CS	1310A2326601-0-MTR	A01

CHANGE by: Y.S._Chu — 25-Jan-2010

SHEET 13 OF 61

www.bufanxiu.com

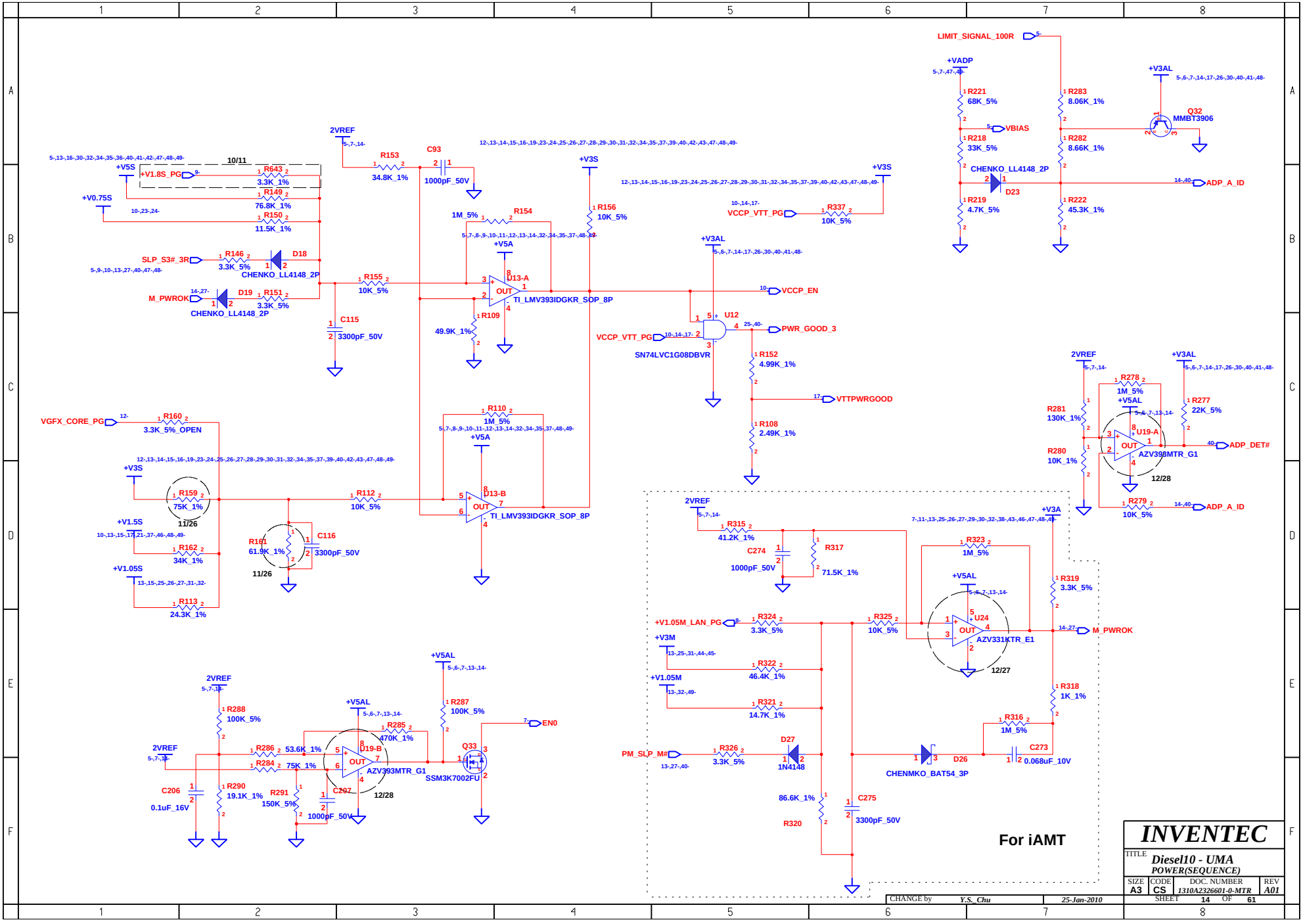

www.bufanxiu.com

	R1138	R1139
STANDARD POWER	OPEN	STUFF
LOW POWER	STUFF	OPEN

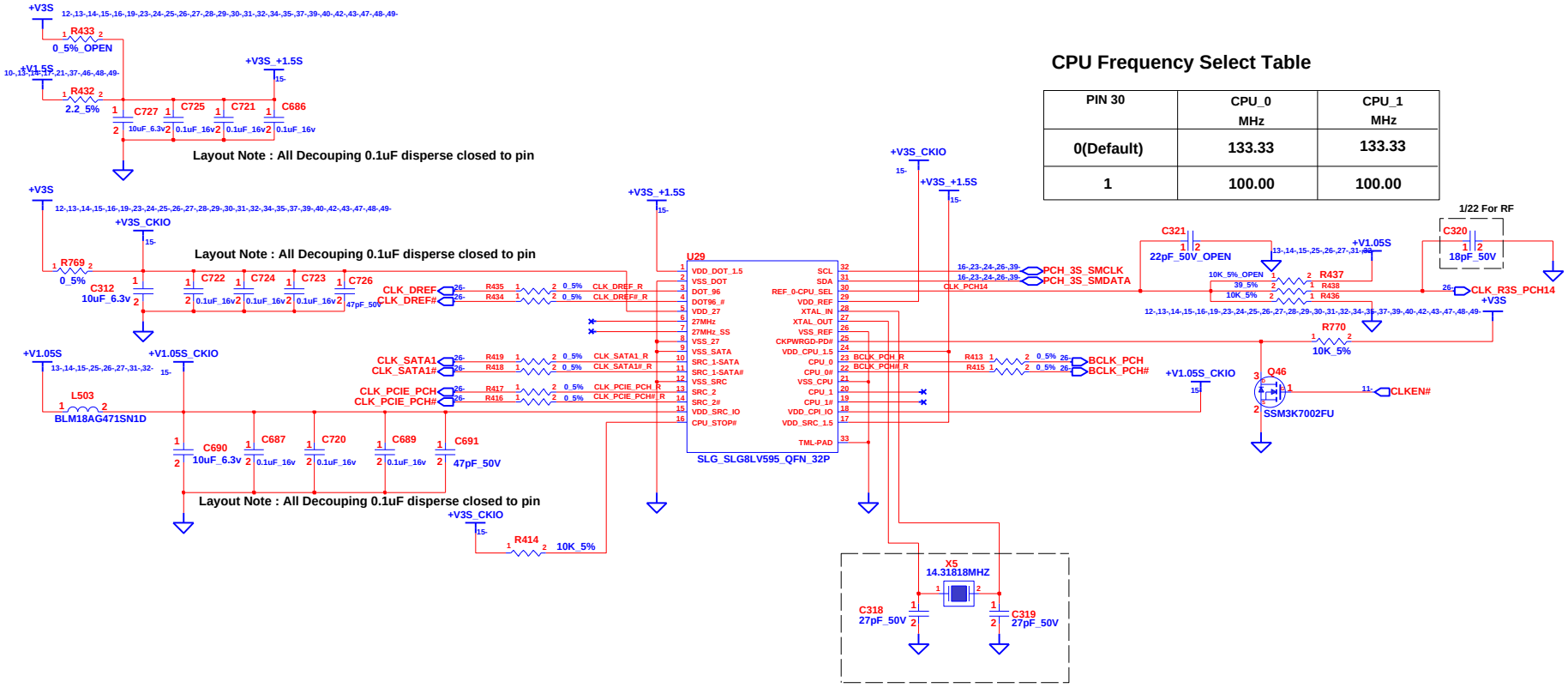

Layout Note : All Decouping 0.1uF disperse closed to pin

Layout Note : All Decouping 0.1uF disperse closed to pin

Layout Note: Place close to CLKGEN within 500 mils

CPU Frequency Select Table

PIN 30	CPU_0 MHz	CPU_1 MHz
0(Default)	133.33	133.33
1	100.00	100.00

CHANGE by	Y.S._Chu	25-Jan-2010	

INVENTEC

TITLE: Diesel10 - UMA
CLOCK GENERATOR

SIZE	CODE	DOC. NUMBER	REV
A3	CS	1310A2326601-0-MTR	A01

SHEET 15 OF 61

www.bufanxiu.com

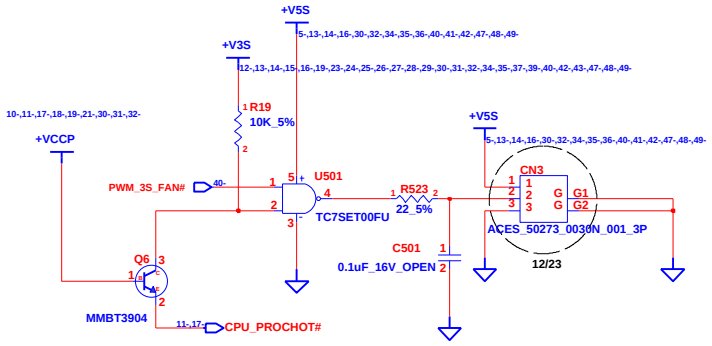

FAN

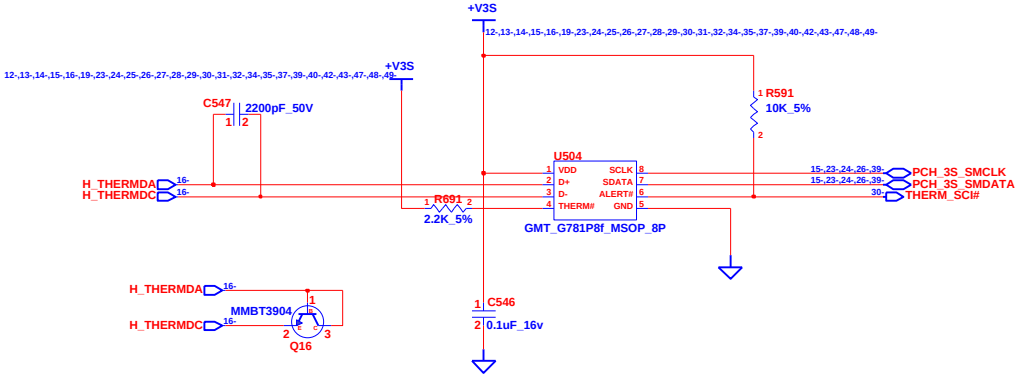

CHANGE by	Y.S._Chu	25-Jan-2010	

INVENTEC

TITLE *Diesel10 - UMA*
FAN

SIZE	CODE	DOC. NUMBER	REV
A3	CS	1310A2326601-0-MTR	A01

SHEET 16 OF 61

www.bufanxiu.com

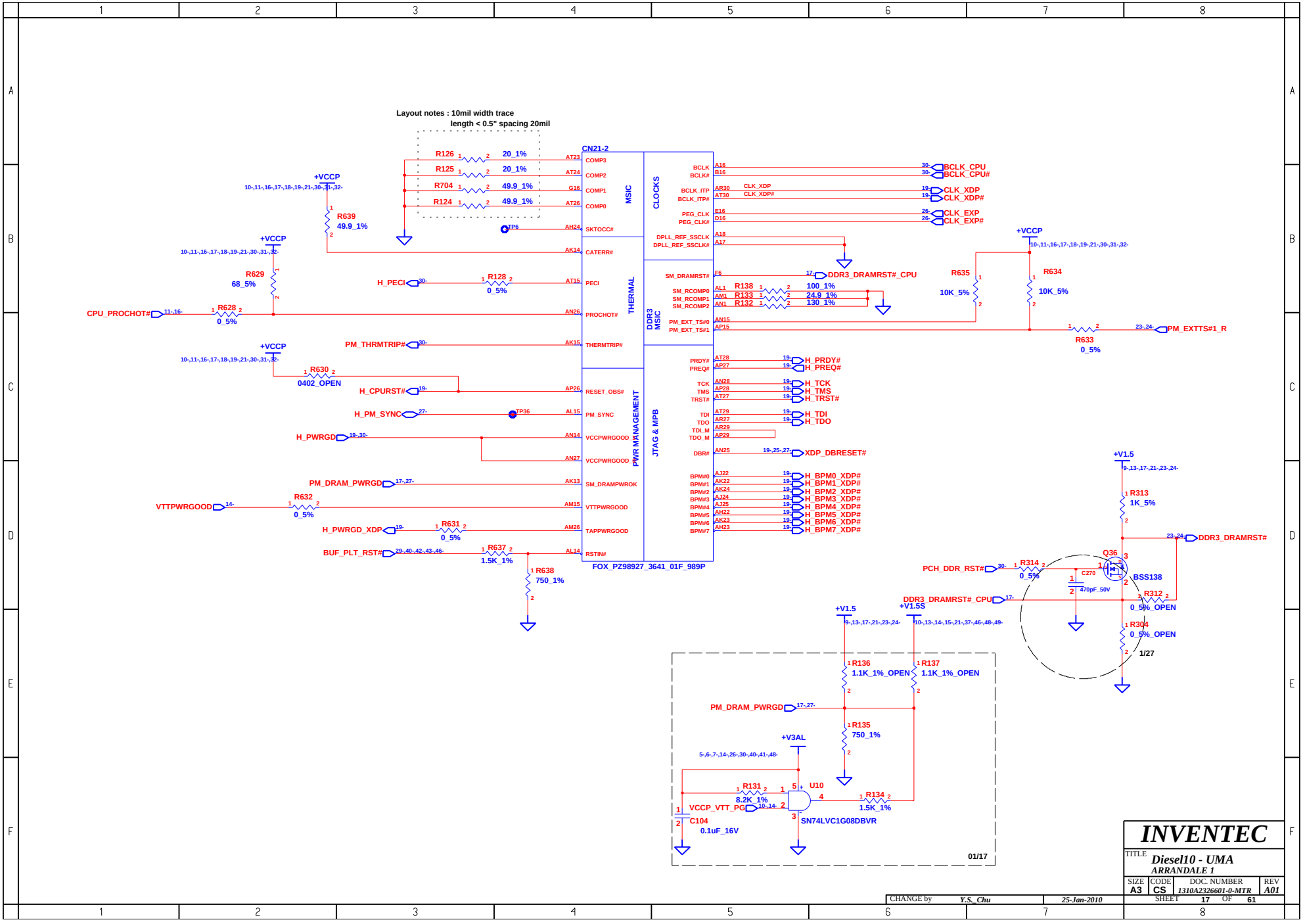

www.bufanxiu.com

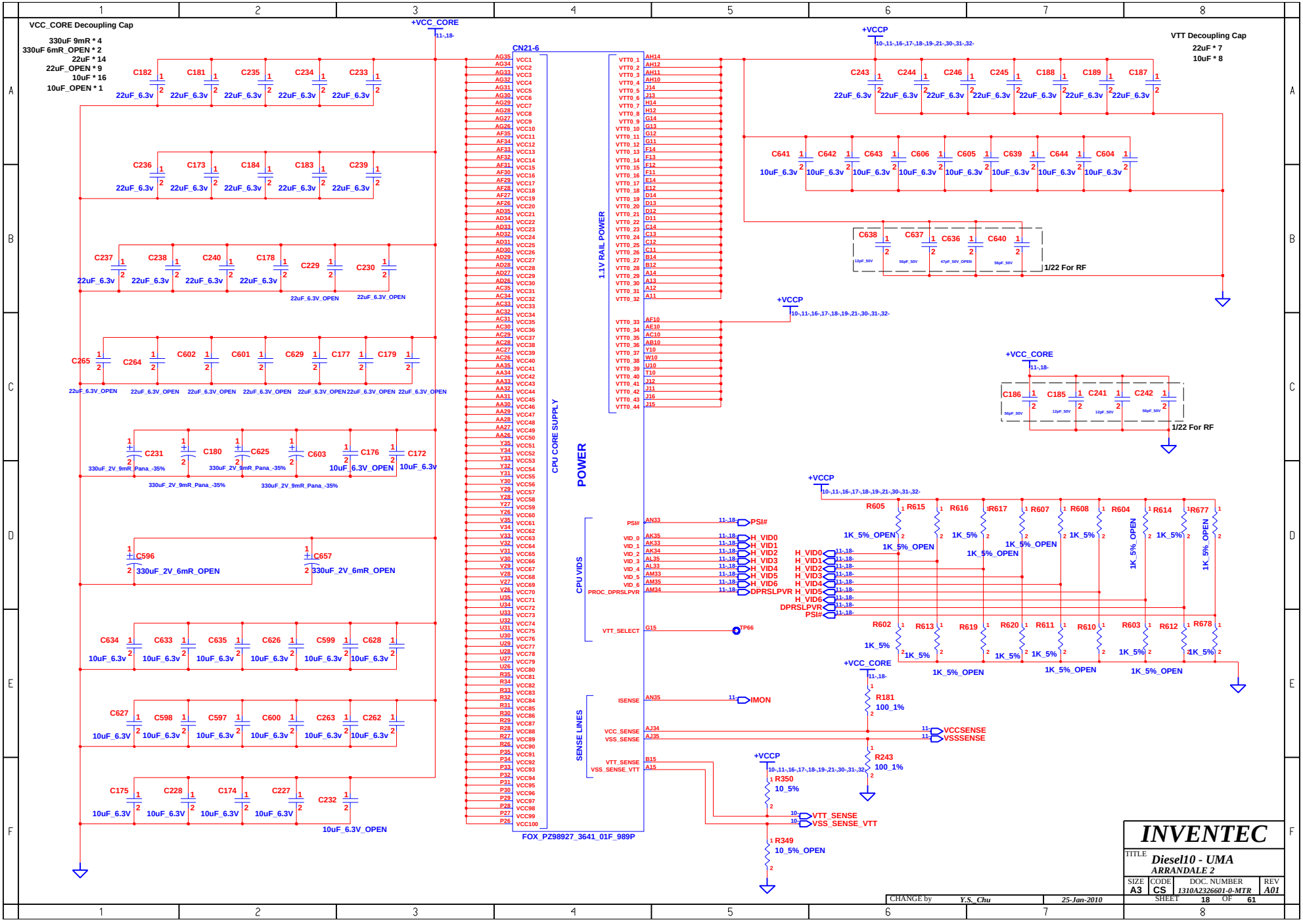

www.bufanxiu.com

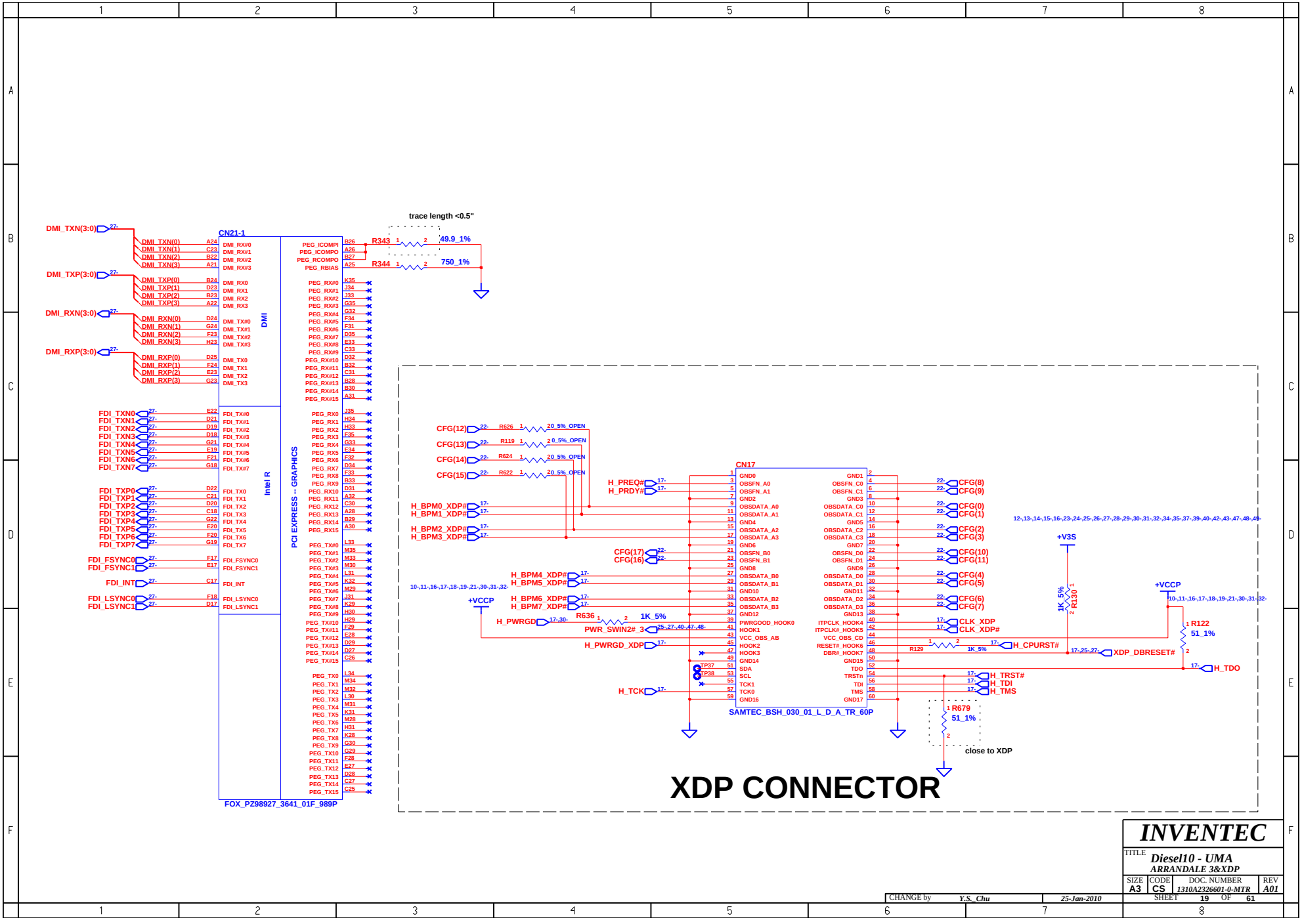

INVENTEC

TITLE Diesel10 - UMA
ARRANDALE 3&XDP

SIZE	CODE	DOC. NUMBER	REV
A3	CS	1310A2326601-0-MTR	A01

SHEET 19 OF 61

CHANGE by Y.S._Chu 25-Jan-2010

www.bufanxiu.com

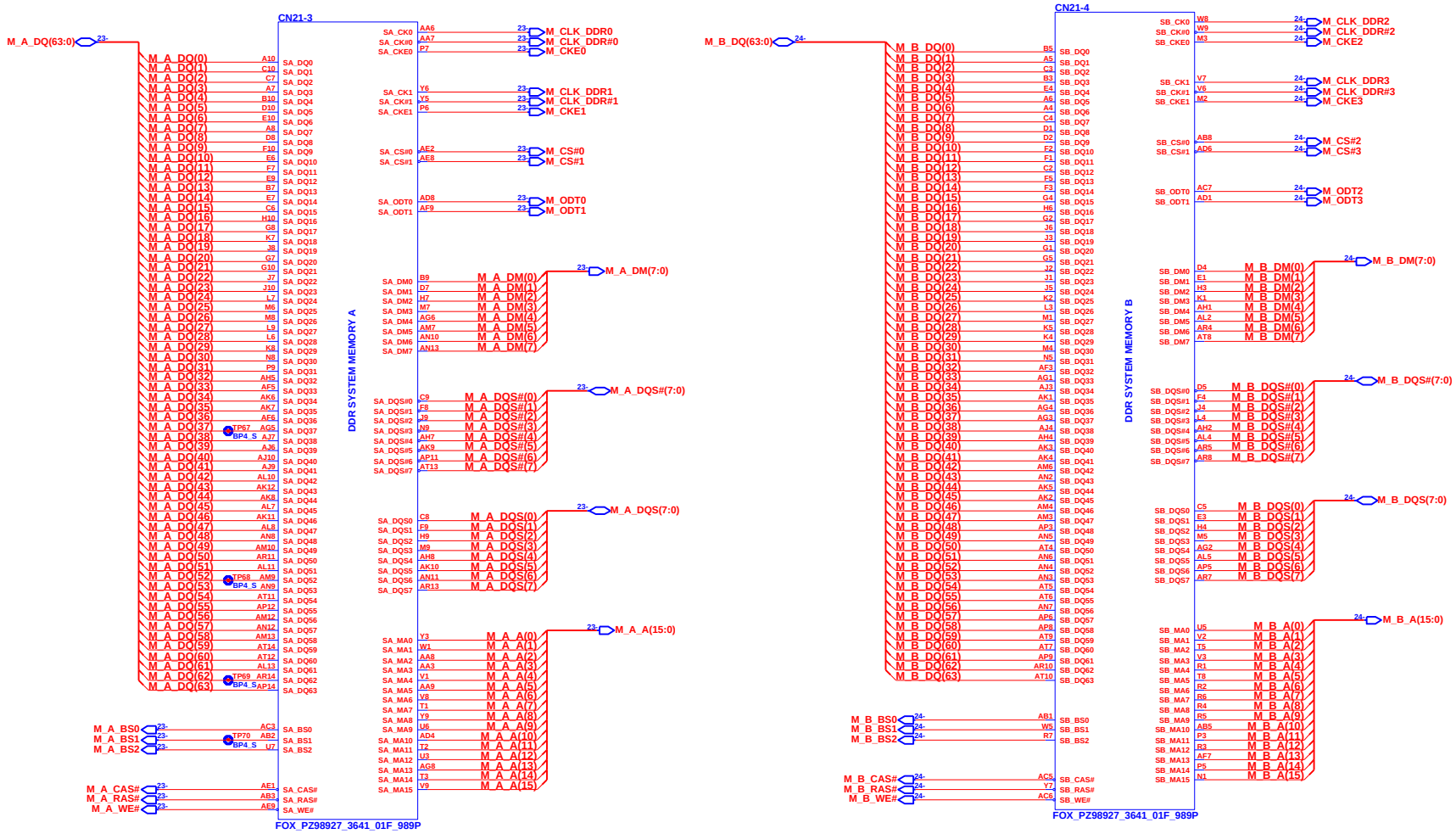

CHANGE by	Y.S._Chu	25-Jan-2010	

INVENTEC

TITLE: *Diesel10 - UMA*
ARRANDALE 4

SIZE	CODE	DOC. NUMBER	REV
A3	CS	1310A2326601-0-MTR	A01

SHEET 20 OF 61

www.bufanxiu.com

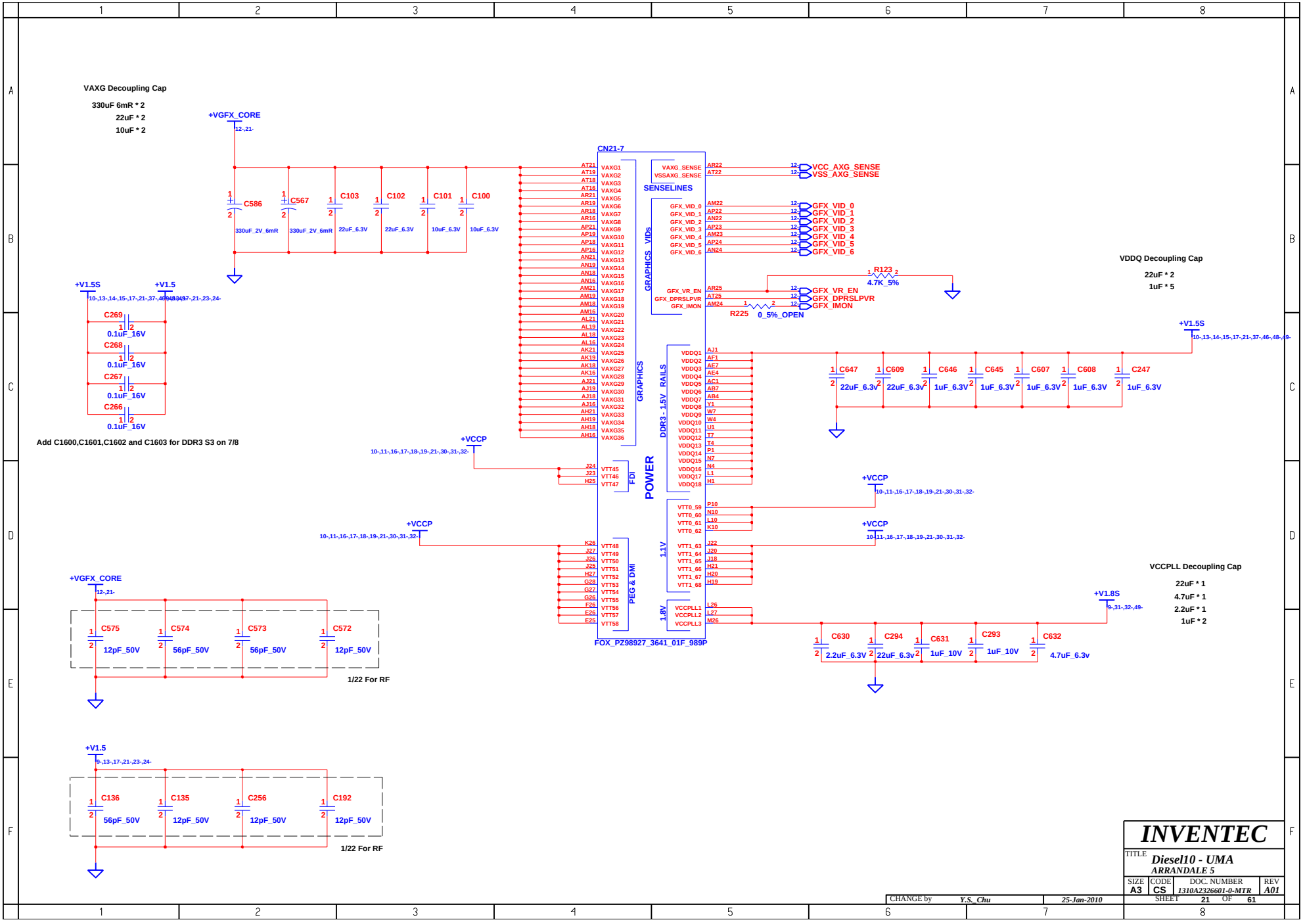

www.bufanxiu.com

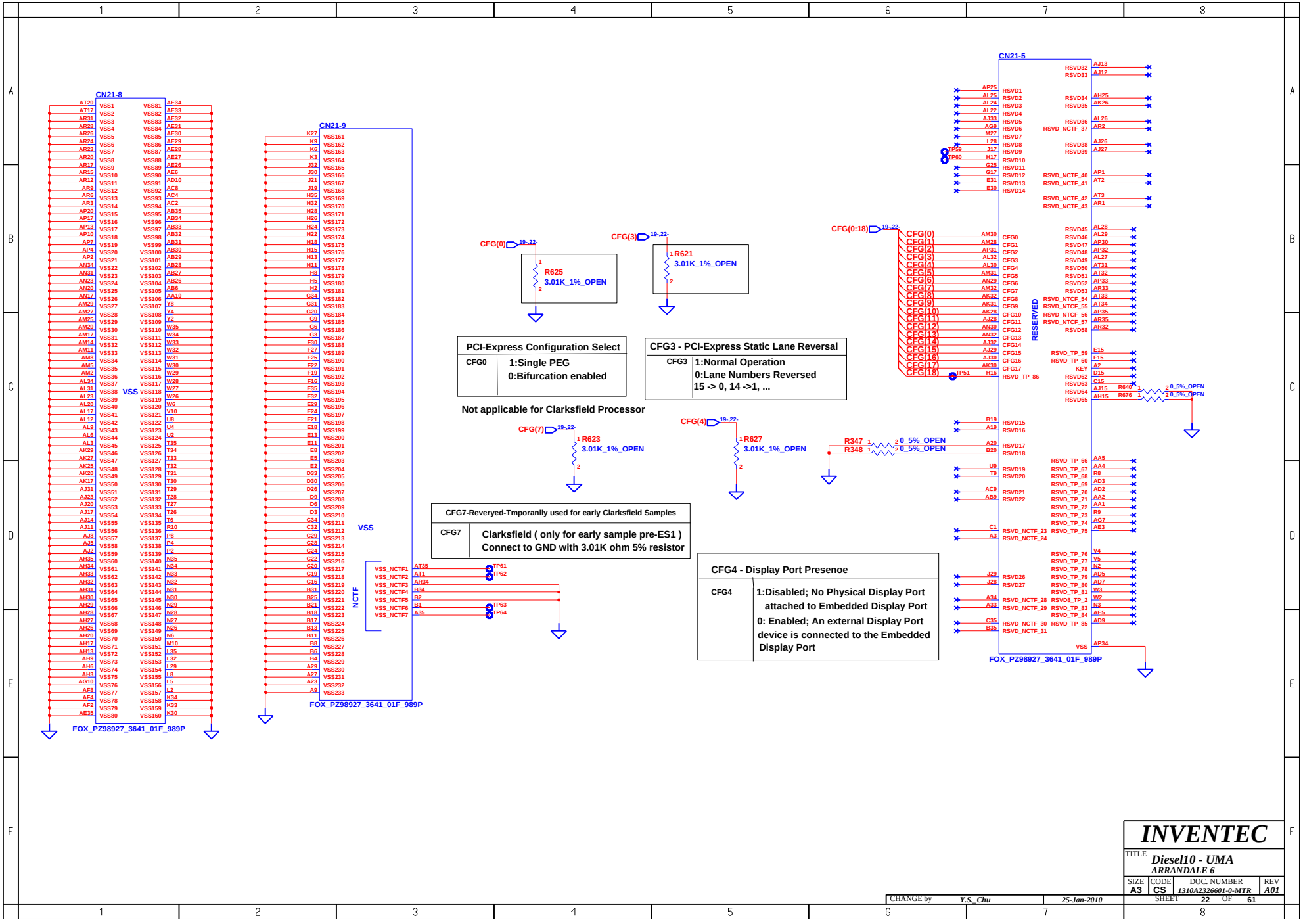

www.bufanxiu.com

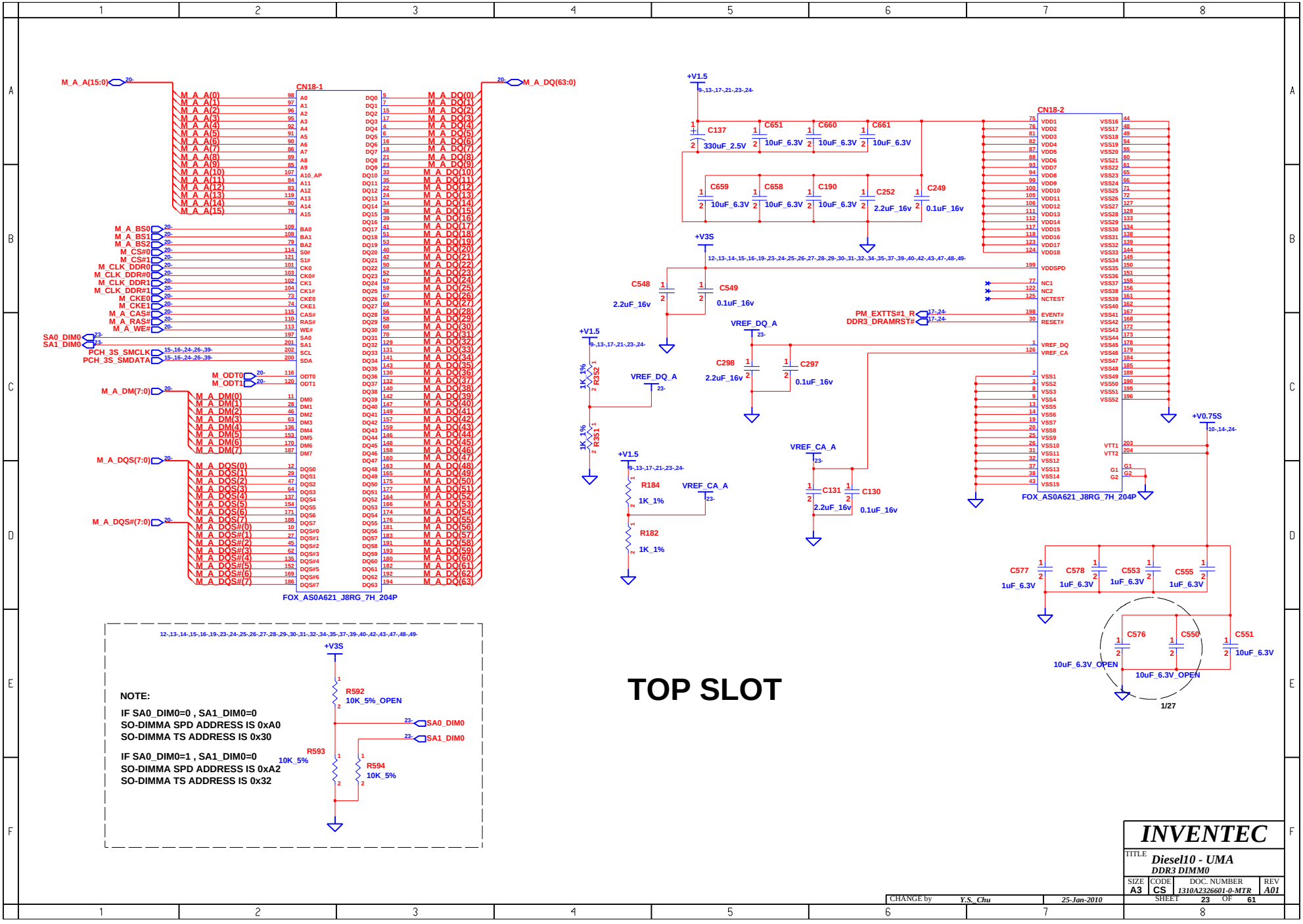

www.bufanxiu.com

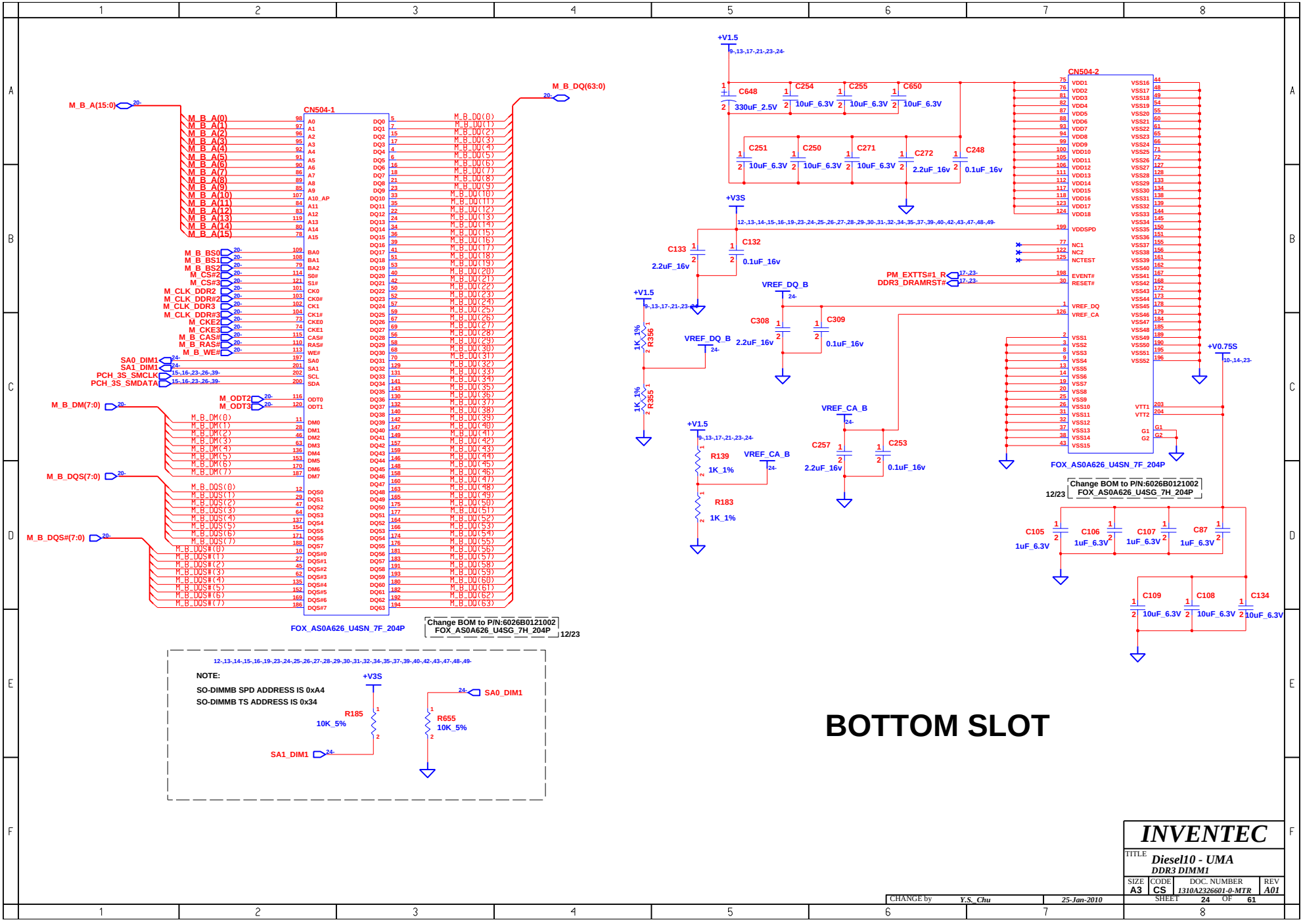

www.bufanxiu.com

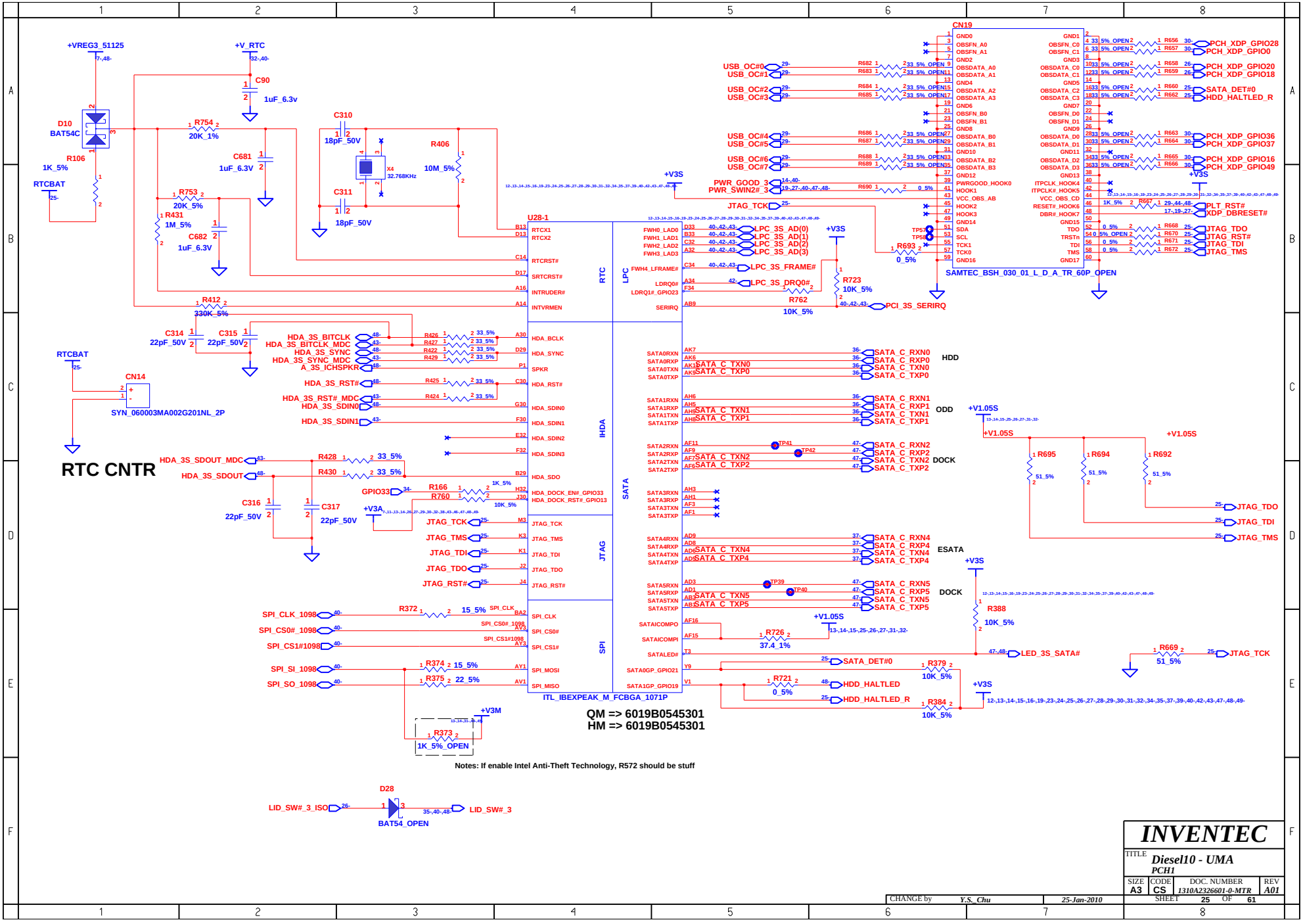

www.bufanxiu.com

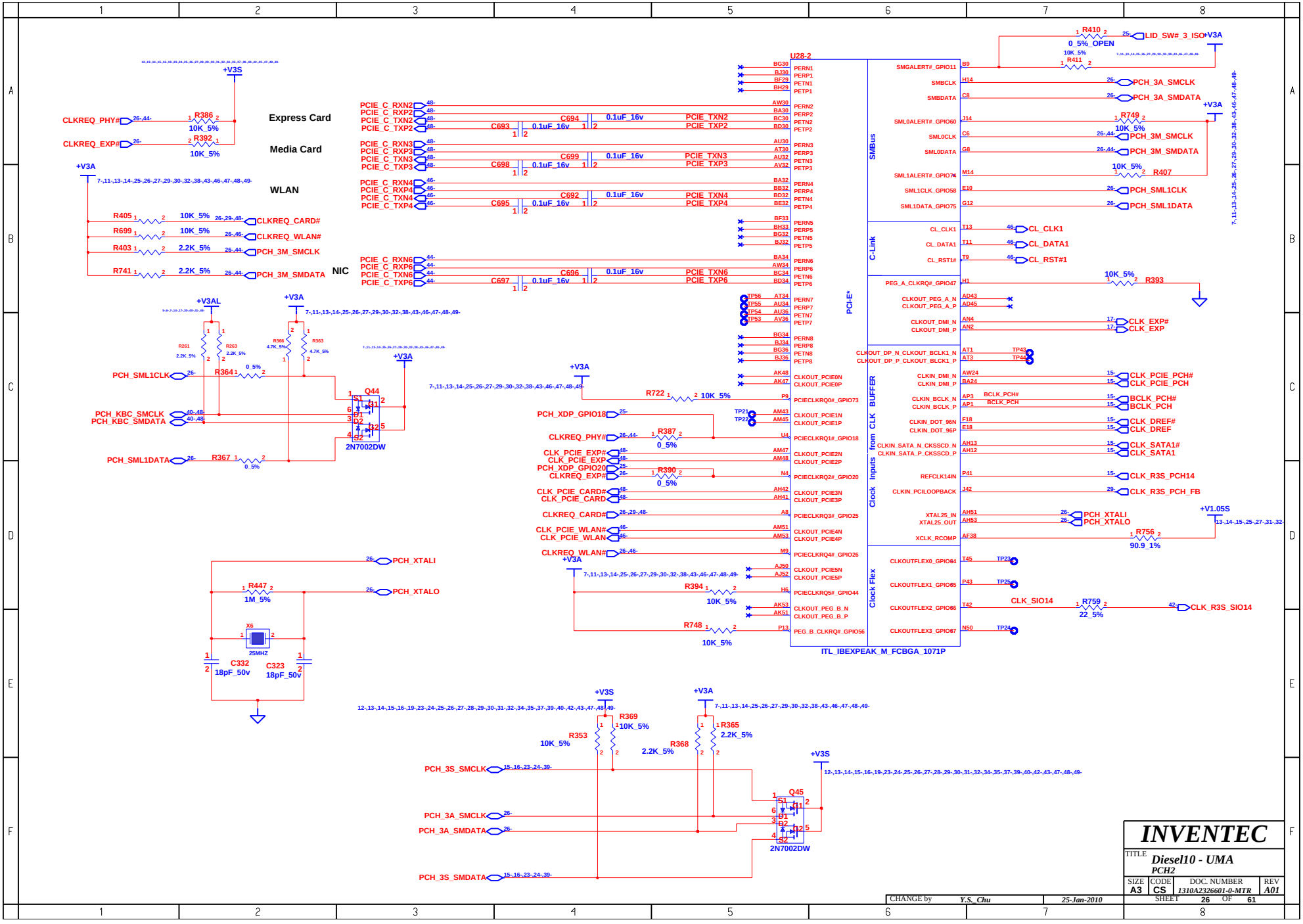

www.bufanxiu.com

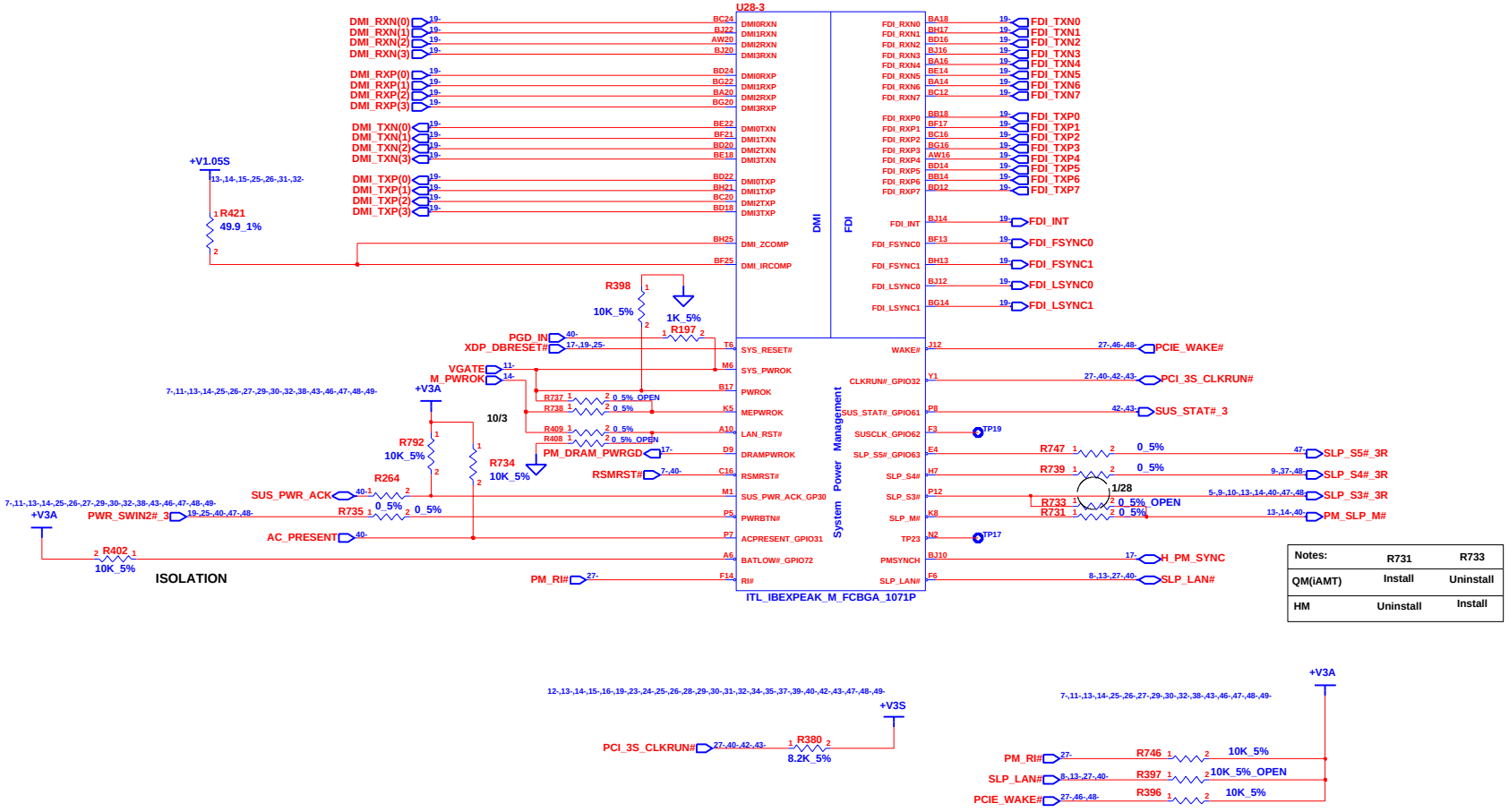

Notes:	R731	R733
QM(iAMT)	Install	Uninstall
HM	Uninstall	Install

INVENTEC

TITLE: *Diesel10 - UMA*
PCH3

SIZE	CODE	DOC. NUMBER	REV
A3	CS	1310A2326601-0-MTR	A01

SHEET 27 OF 61

CHANGE by *Y.S._Chu* *25-Jan-2010*

www.bufanxiu.com

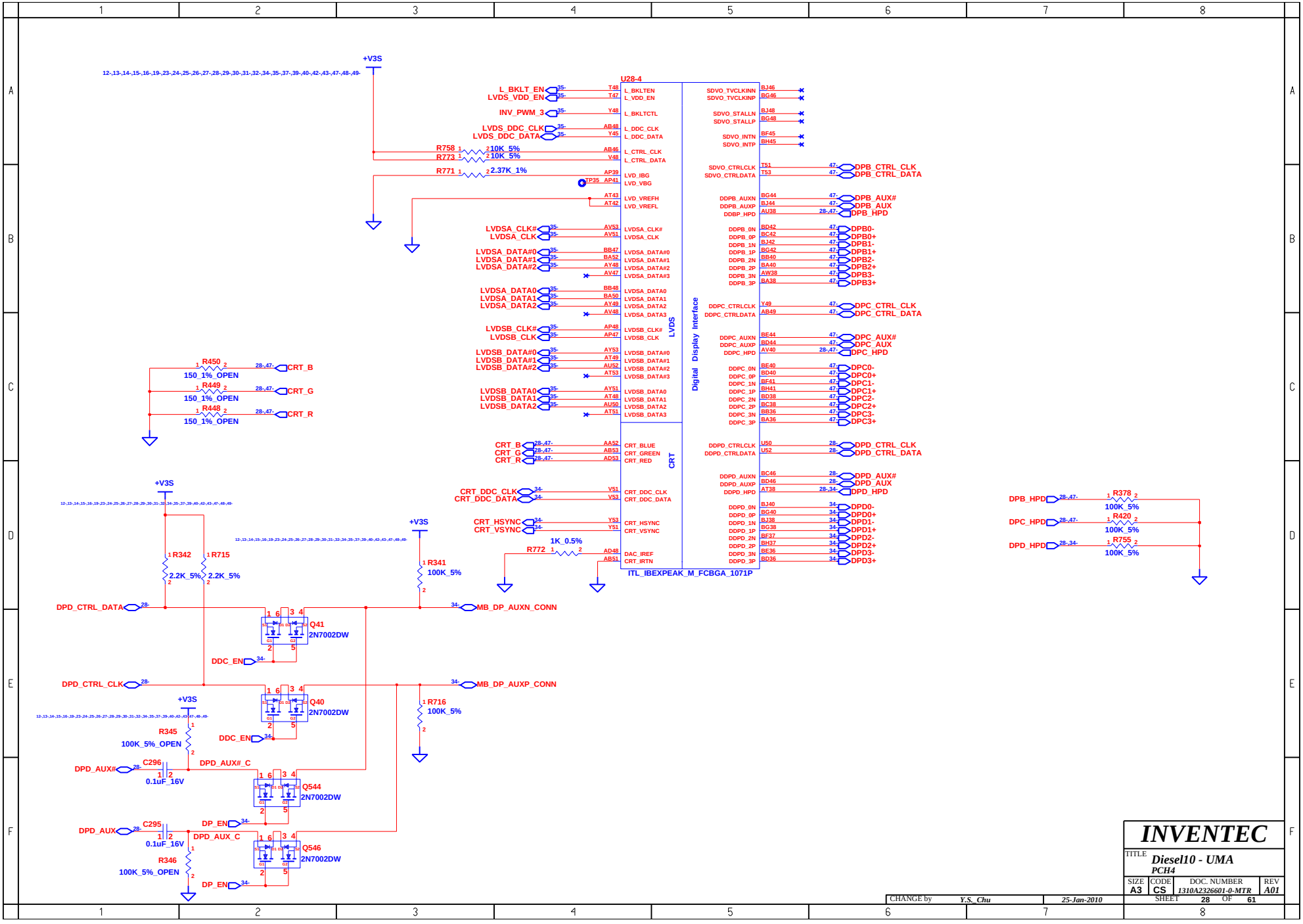

www.bufanxiu.com

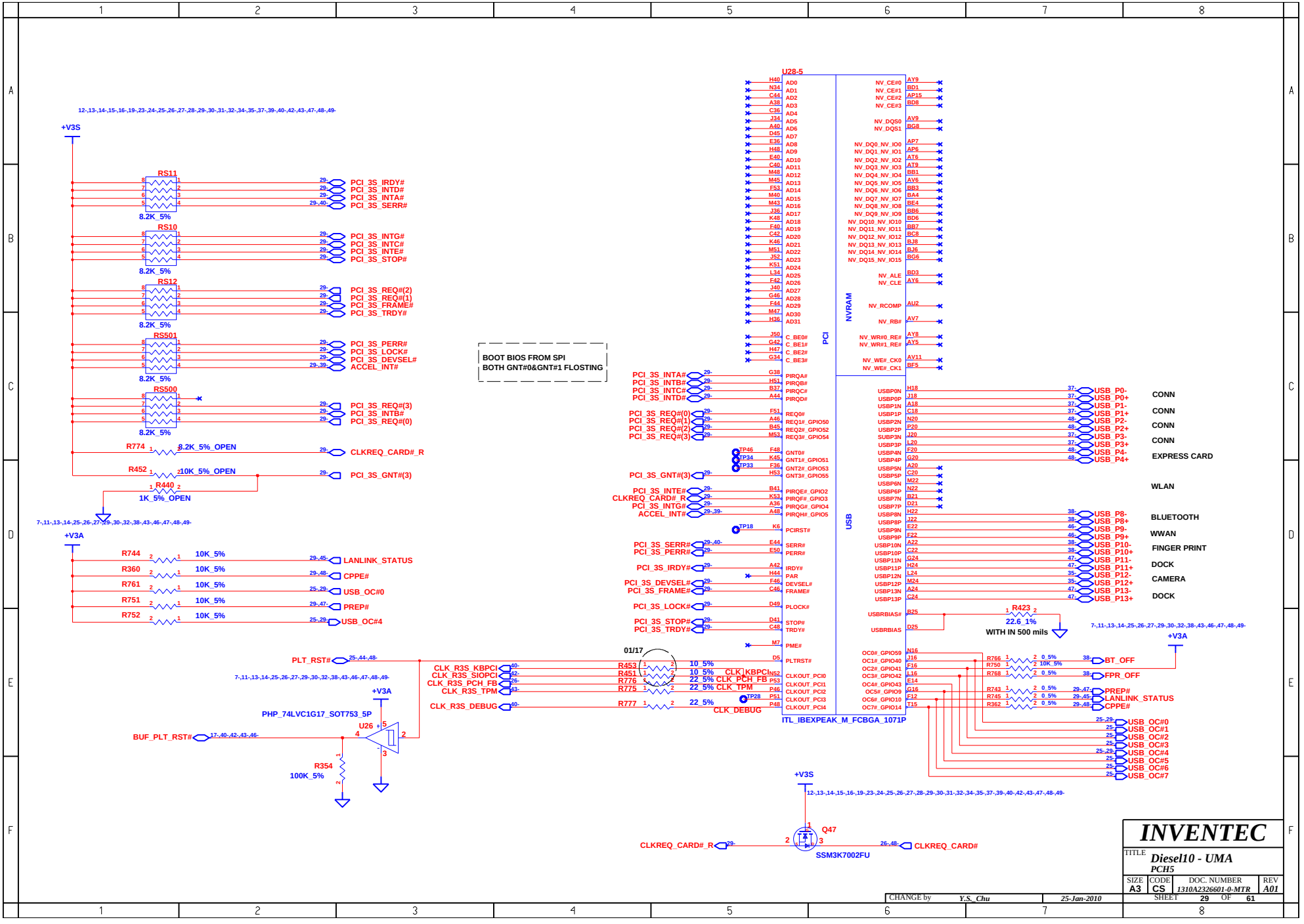

INVENTEC

TITLE *Diesel10 - UMA*
PCH5

SIZE	CODE	DOC. NUMBER	REV
A3	CS	1310A2326601-0-MTR	A01

SHEET 29 OF 61

CHANGE by Y.S._Chu 25-Jan-2010

www.bufanxiu.com

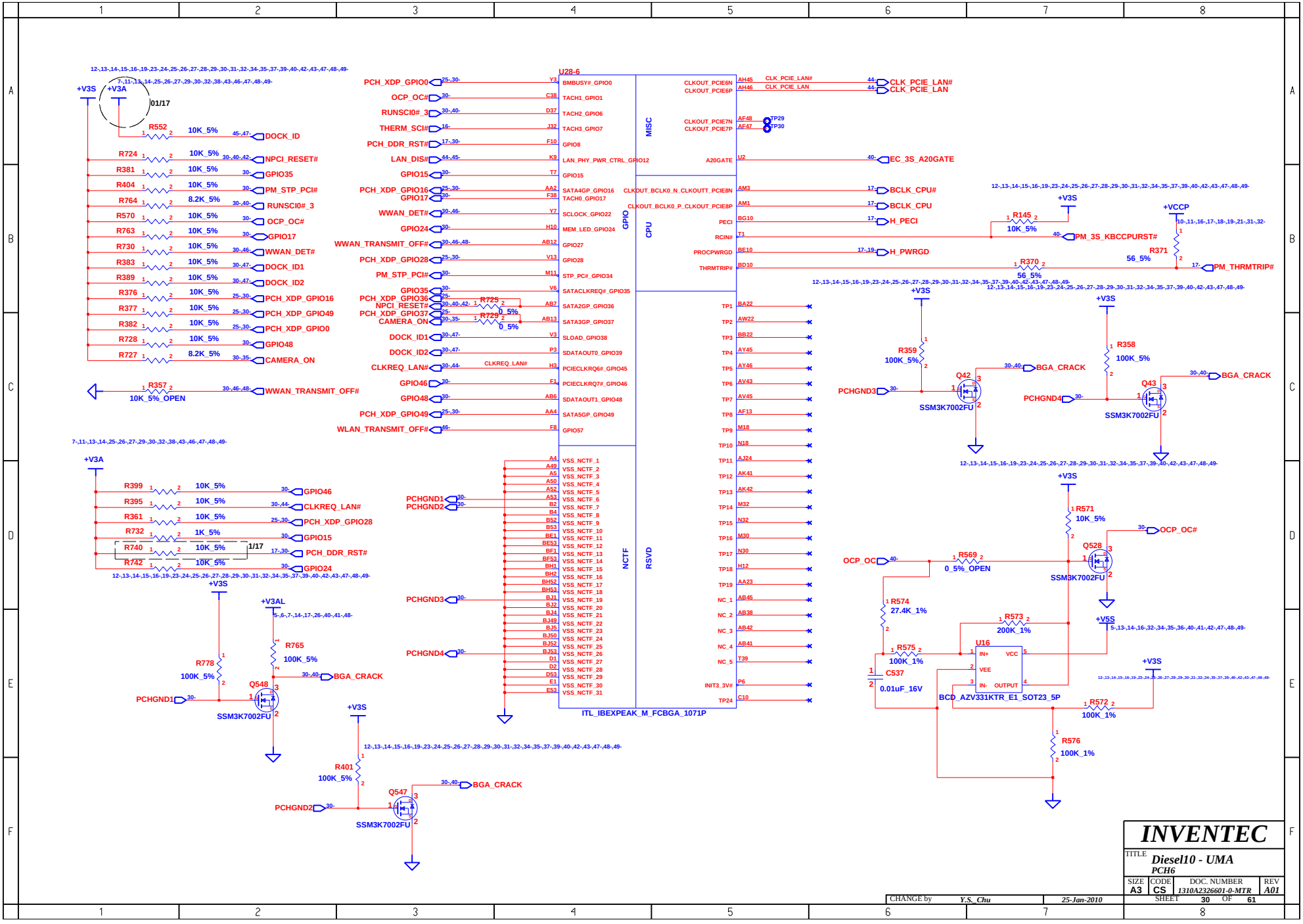

INVENTEC			
TITLE Diesel10 - UMA PCH6			
SIZE A3	CODE CS	DOC. NUMBER 1310A2326601-0-MTR	REV A01
CHANGE by Y.S._Chu	25-Jan-2010	SHEET 30 OF 61	

www.bufanxiu.com

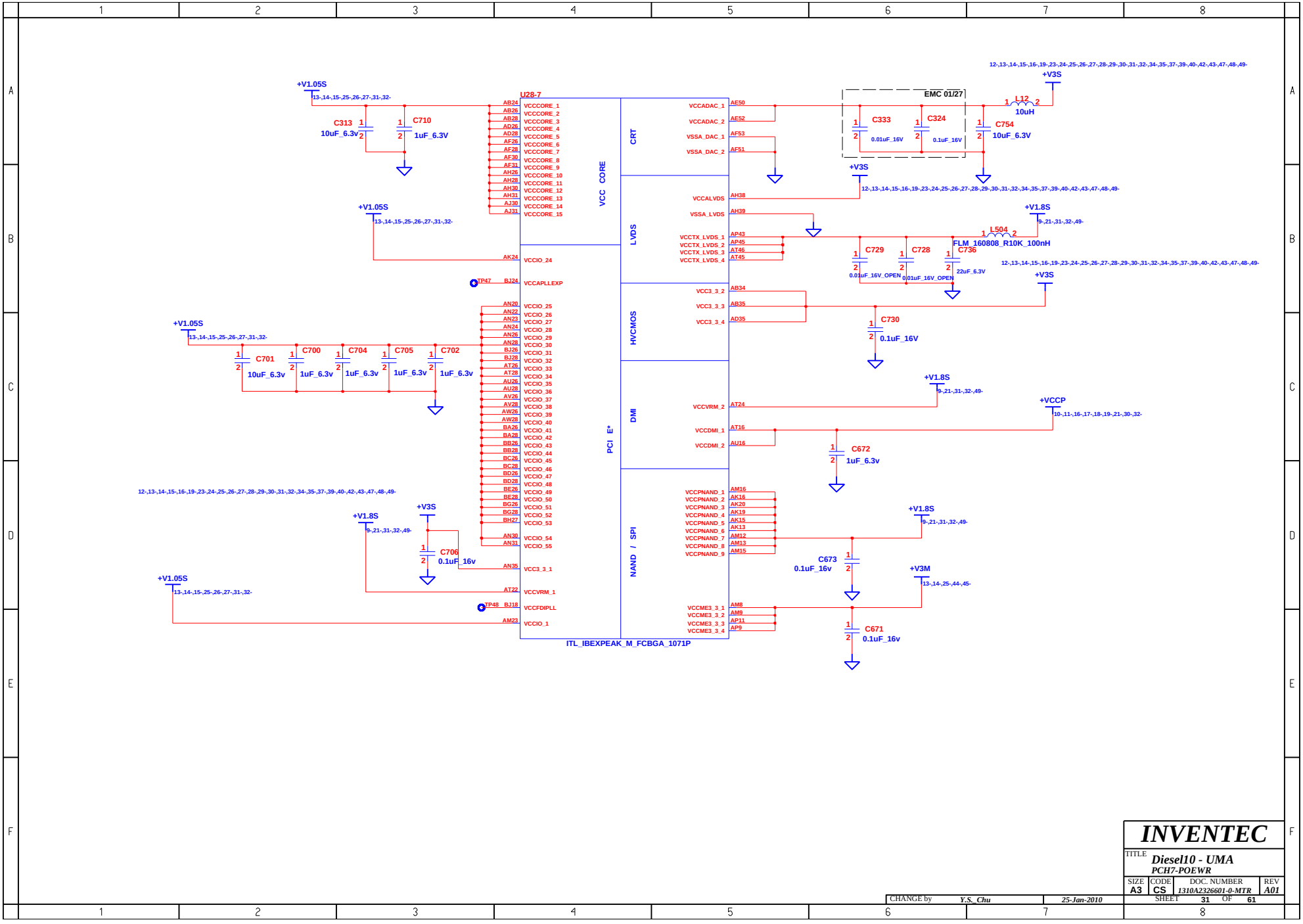

www.bufanxiu.com

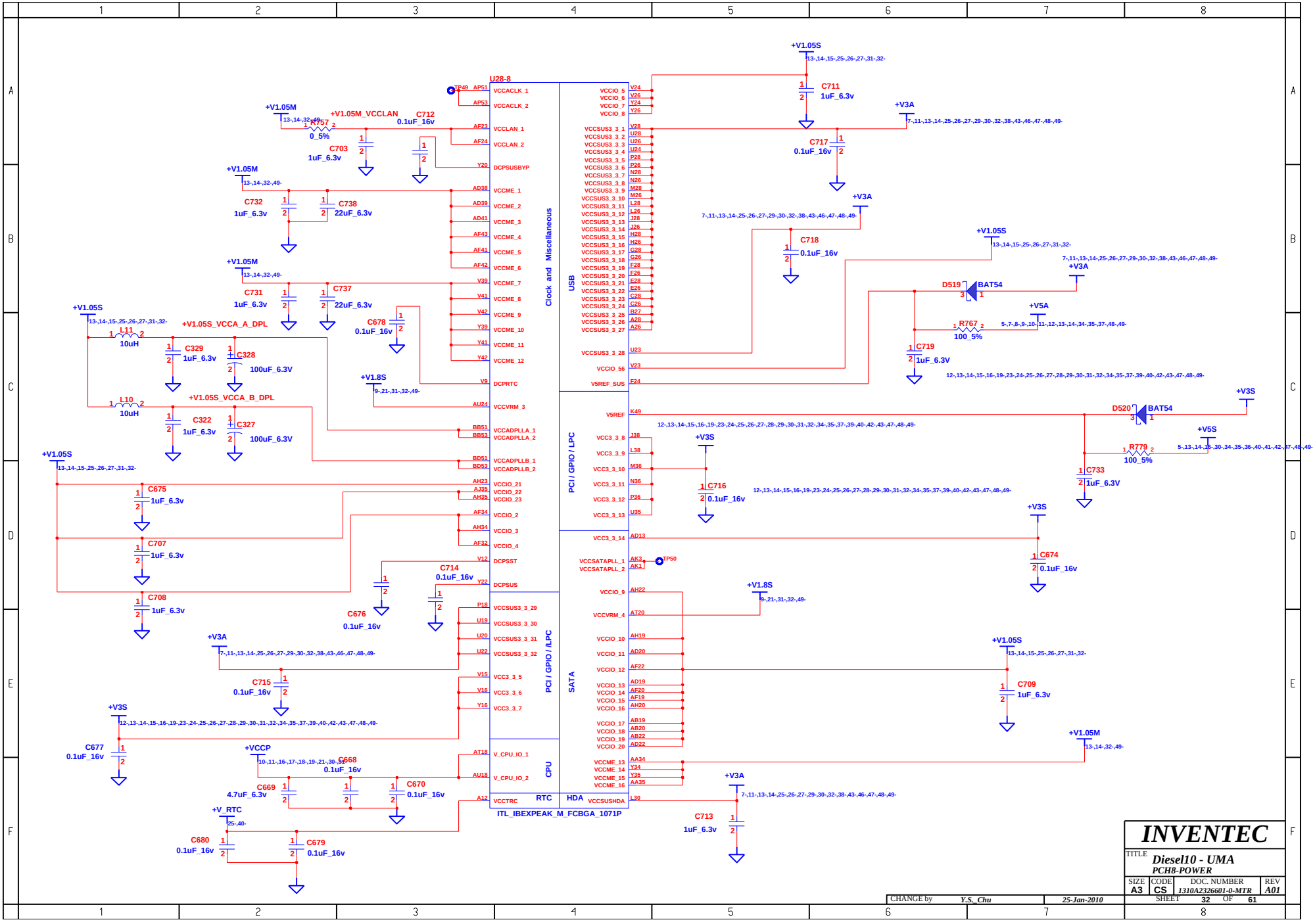

www.bufanxiu.com

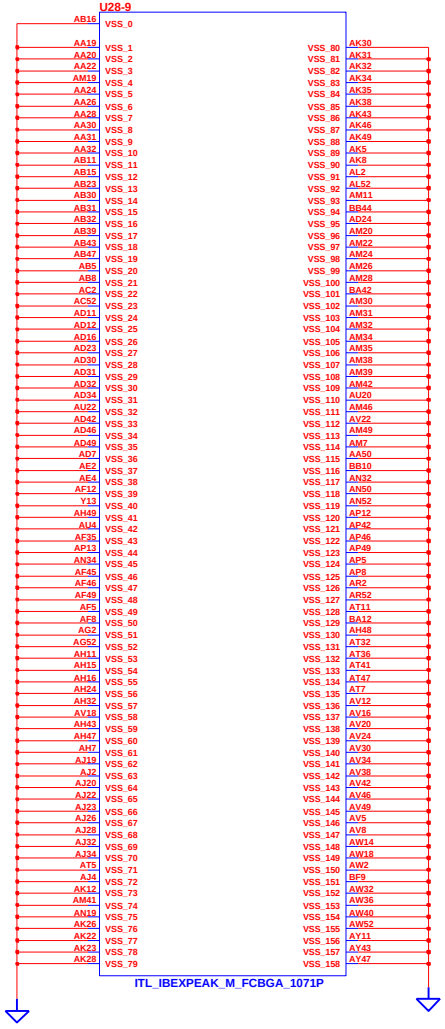

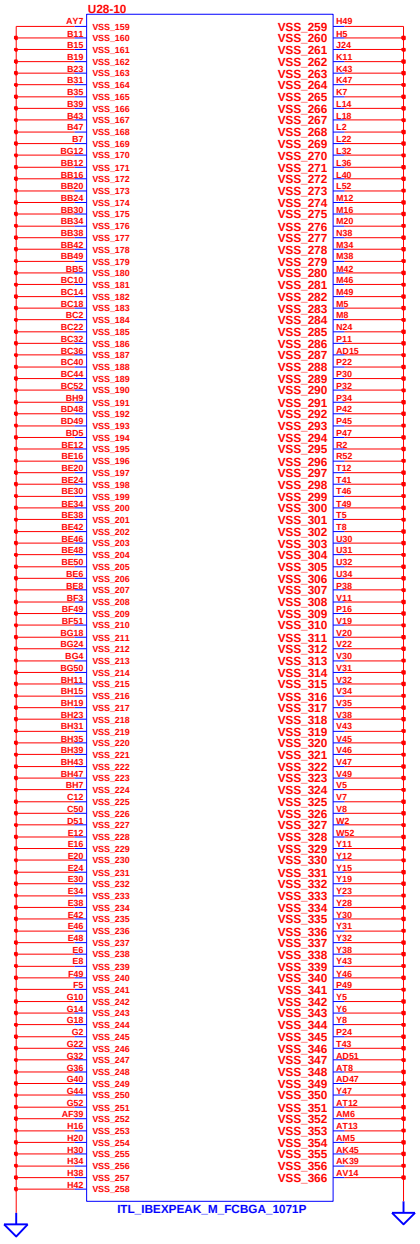

CHANGE by	Y.S._Chu	25-Jan-2010	

INVENTEC

TITLE *Diesel10 - UMA*
PCH9

SIZE	CODE	DOC. NUMBER	REV
A3	CS	1310A2326601-0-MTR	A01

SHEET 33 OF 61

www.bufanxiu.com

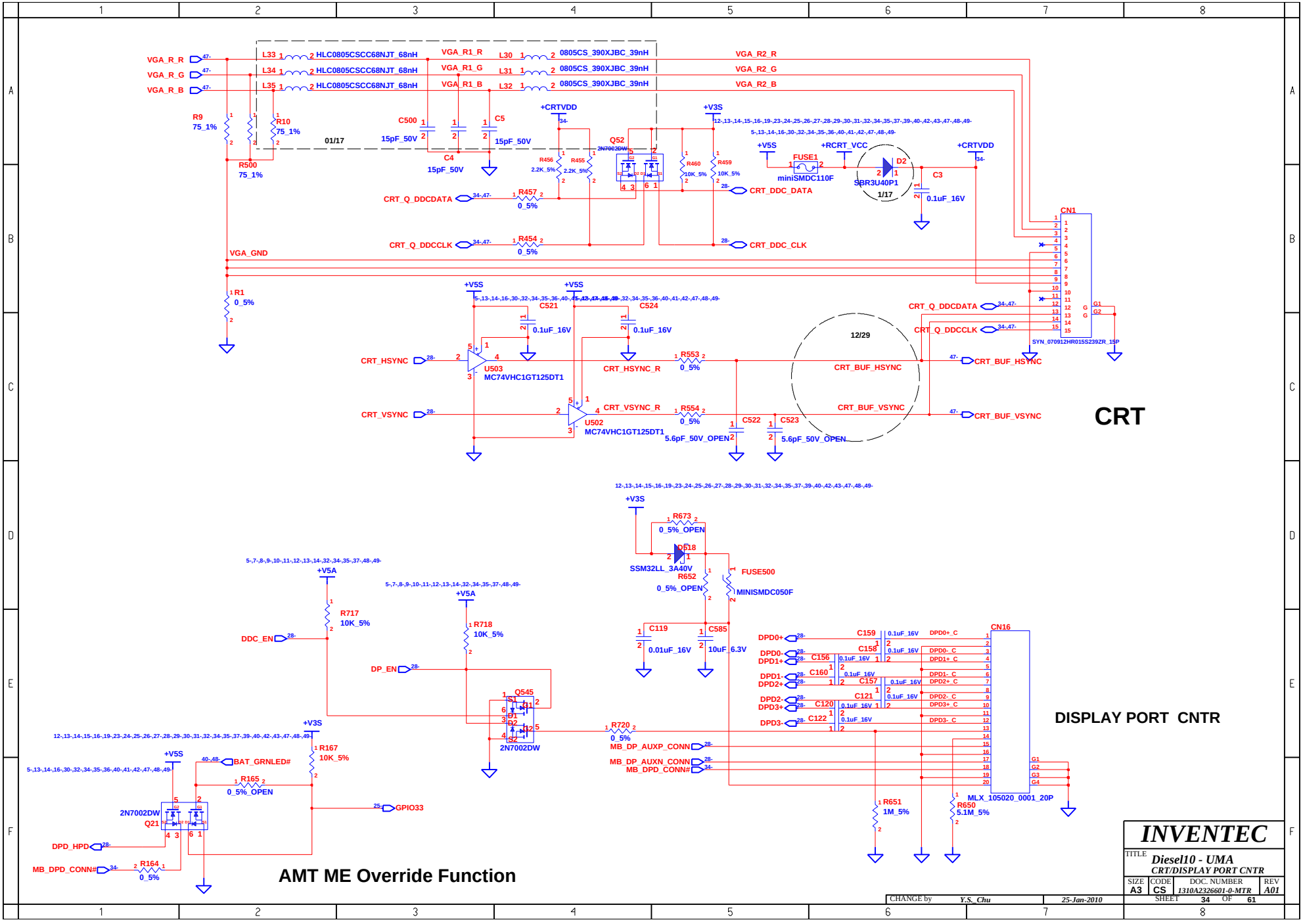

www.bufanxiu.com

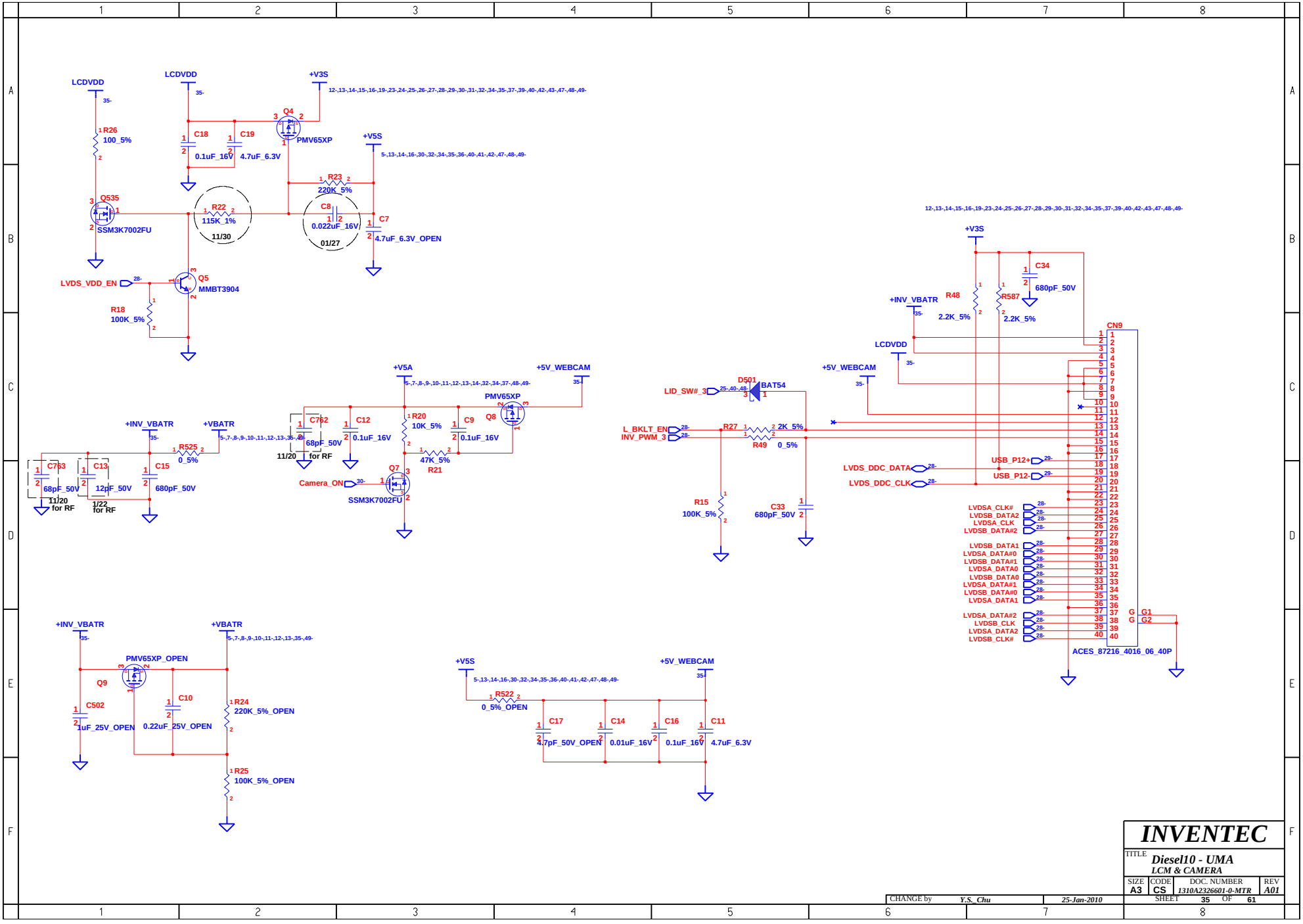

www.bufanxiu.com

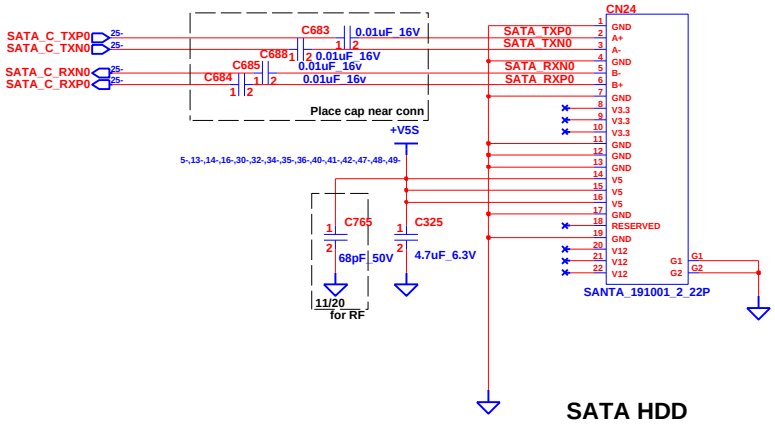

SATA HDD

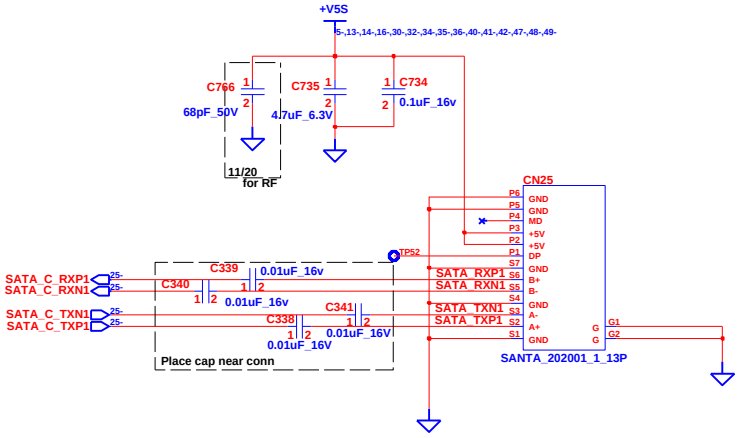

SATA ODD

CHANGE by	Y.S._Chu	25-Jan-2010	

INVENTEC

TITLE *Diesel10 - UMA*
SATA & ODD CNTR

SIZE	CODE	DOC. NUMBER	REV
A3	CS	1310A2326601-0-MTR	A01

SHEET 36 OF 61

www.bufanxiu.com

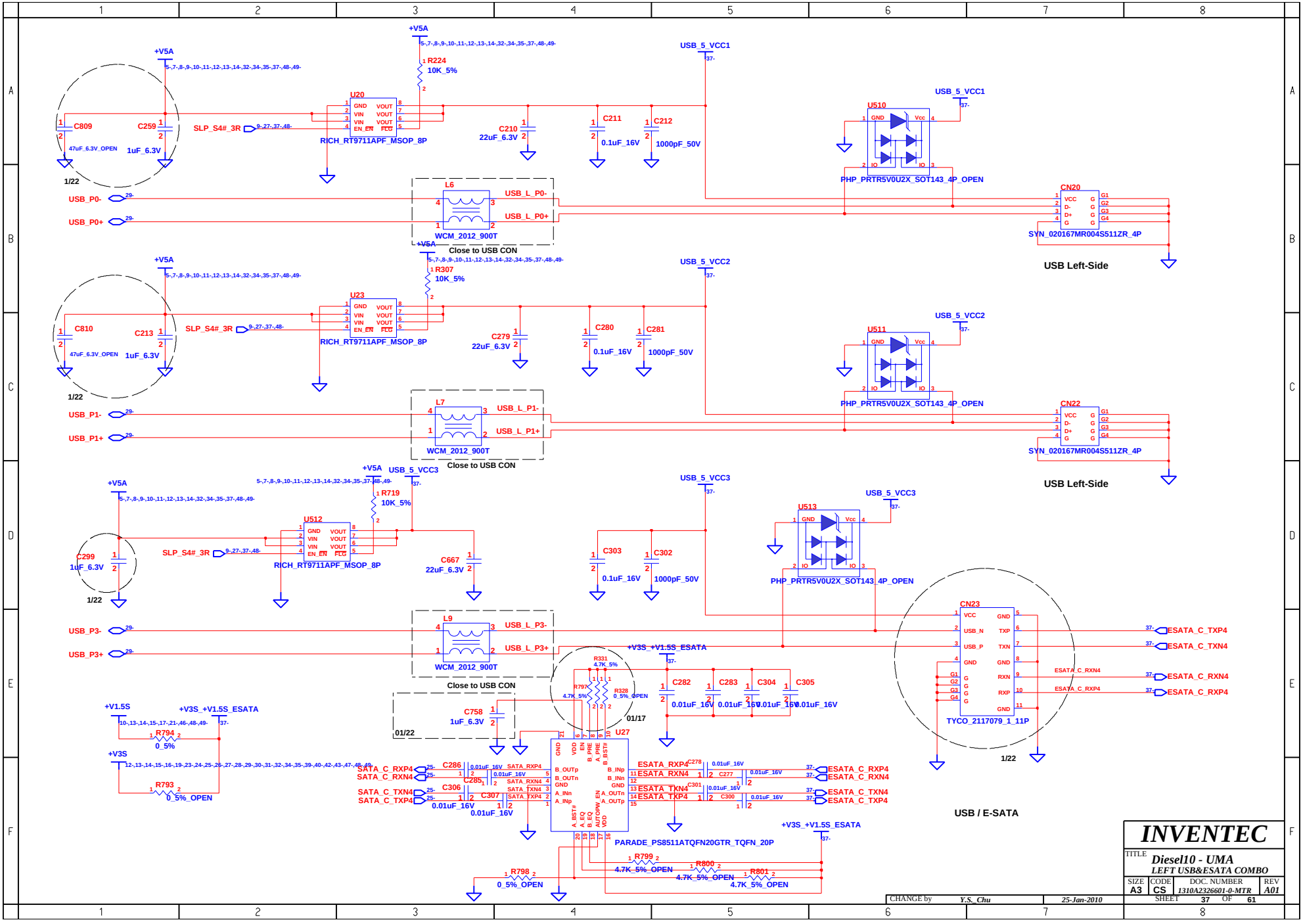

www.bufanxiu.com

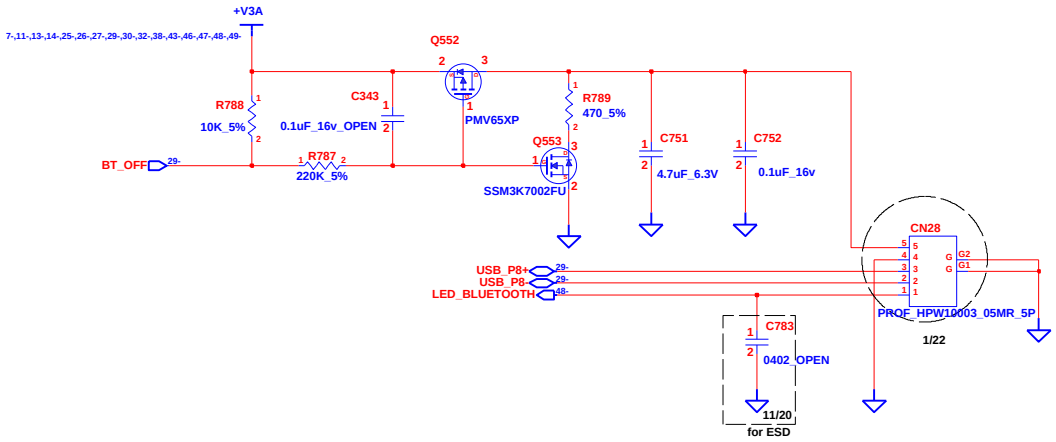

BLUETOOTH

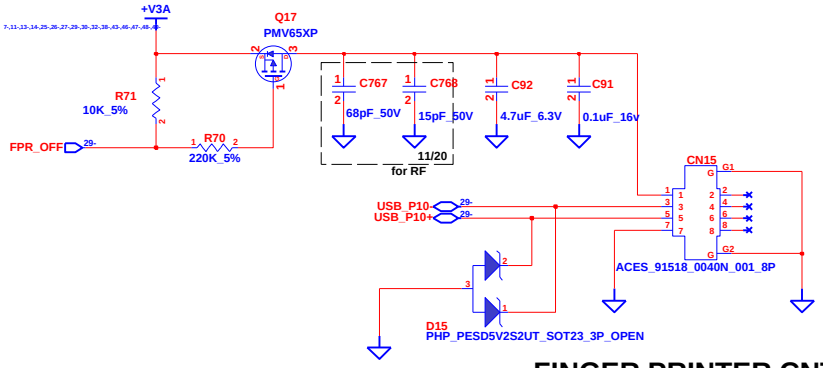

FINGER PRINTER CNTR

CHANGE by	Y.S._Chu	25-Jan-2010	

INVENTEC

TITLE *Diesel10 - UMA*
BLUETOOTH&FINGER PRINTER

SIZE	CODE	DOC. NUMBER	REV
A3	CS	1310A2326601-0-MTR	A01

SHEET 38 OF 61

www.bufanxiu.com

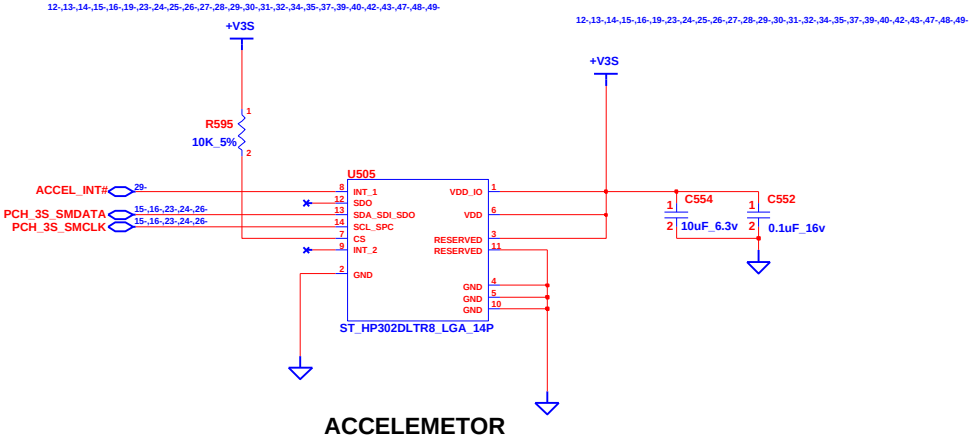

ACCELEMETOR

INVENTEC			
TITLE	Diesel10 - UMA ACCELEMETOR&WEB CAM		
SIZE A3	CODE CS	DOC. NUMBER 1310A2326601-0-MTR	REV A01
CHANGE by Y.S._Chu	25-Jan-2010	SHEET 39 OF 61	

www.bufanxiu.com

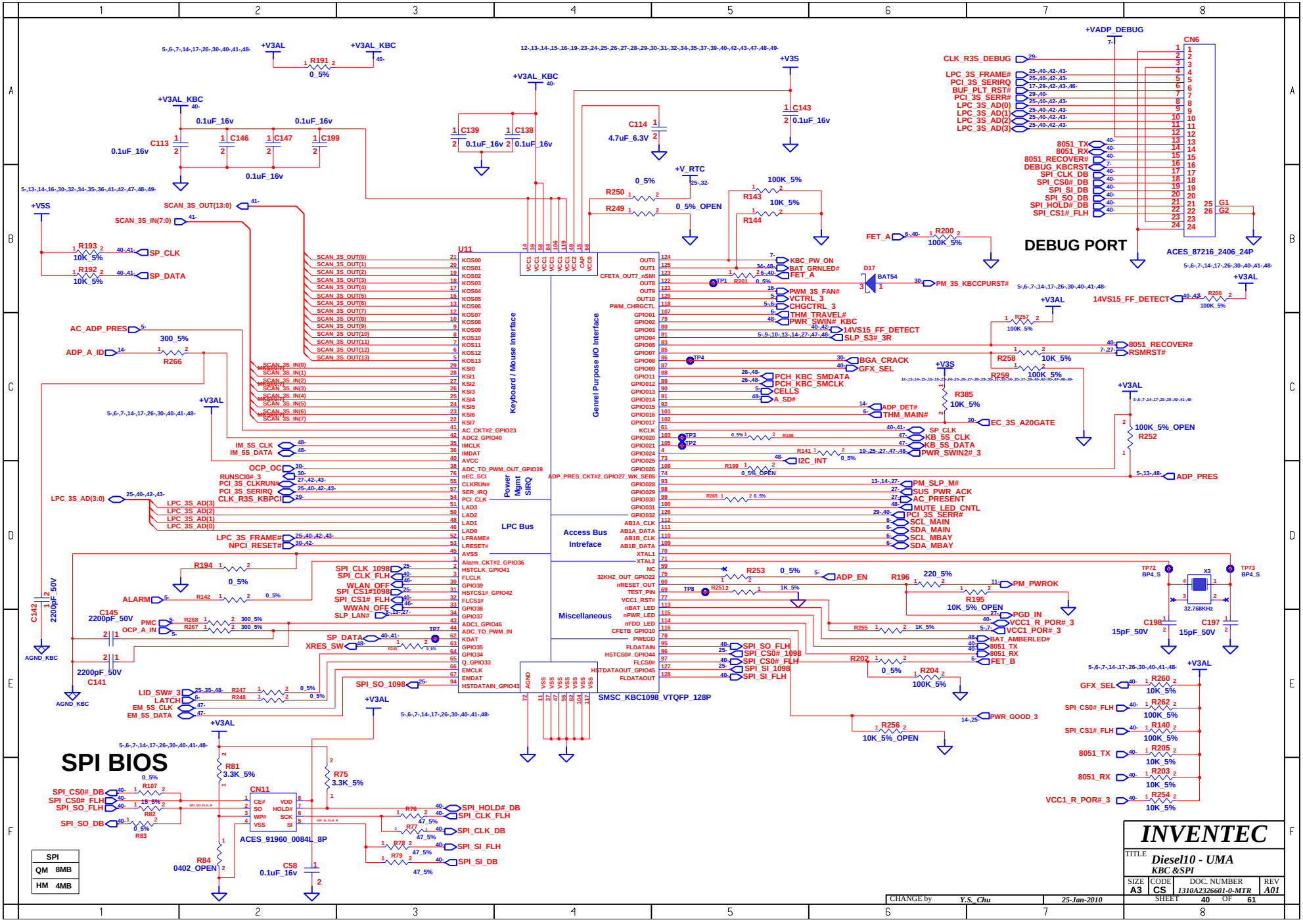

www.bufanxiu.com

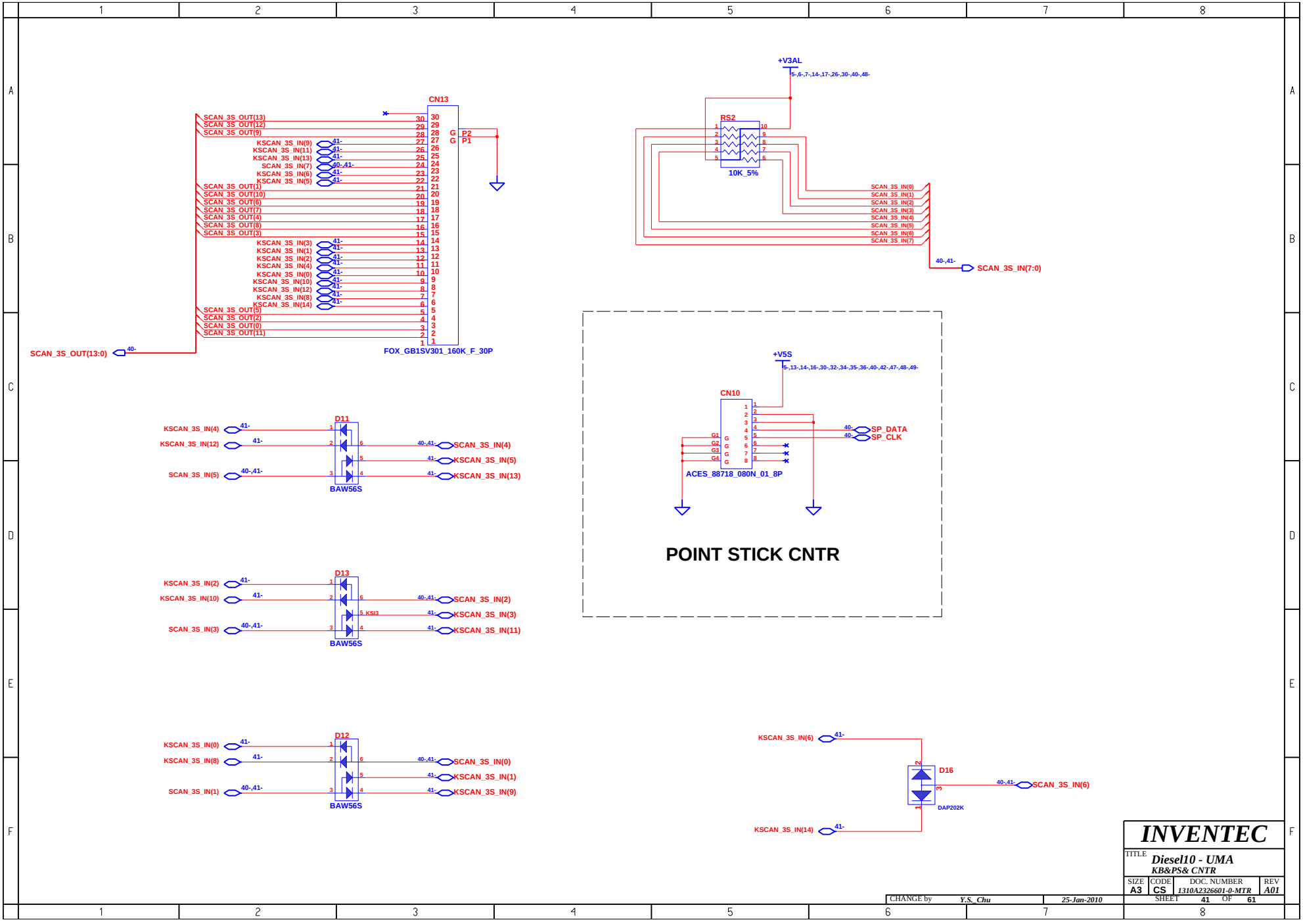

www.bufanxiu.com

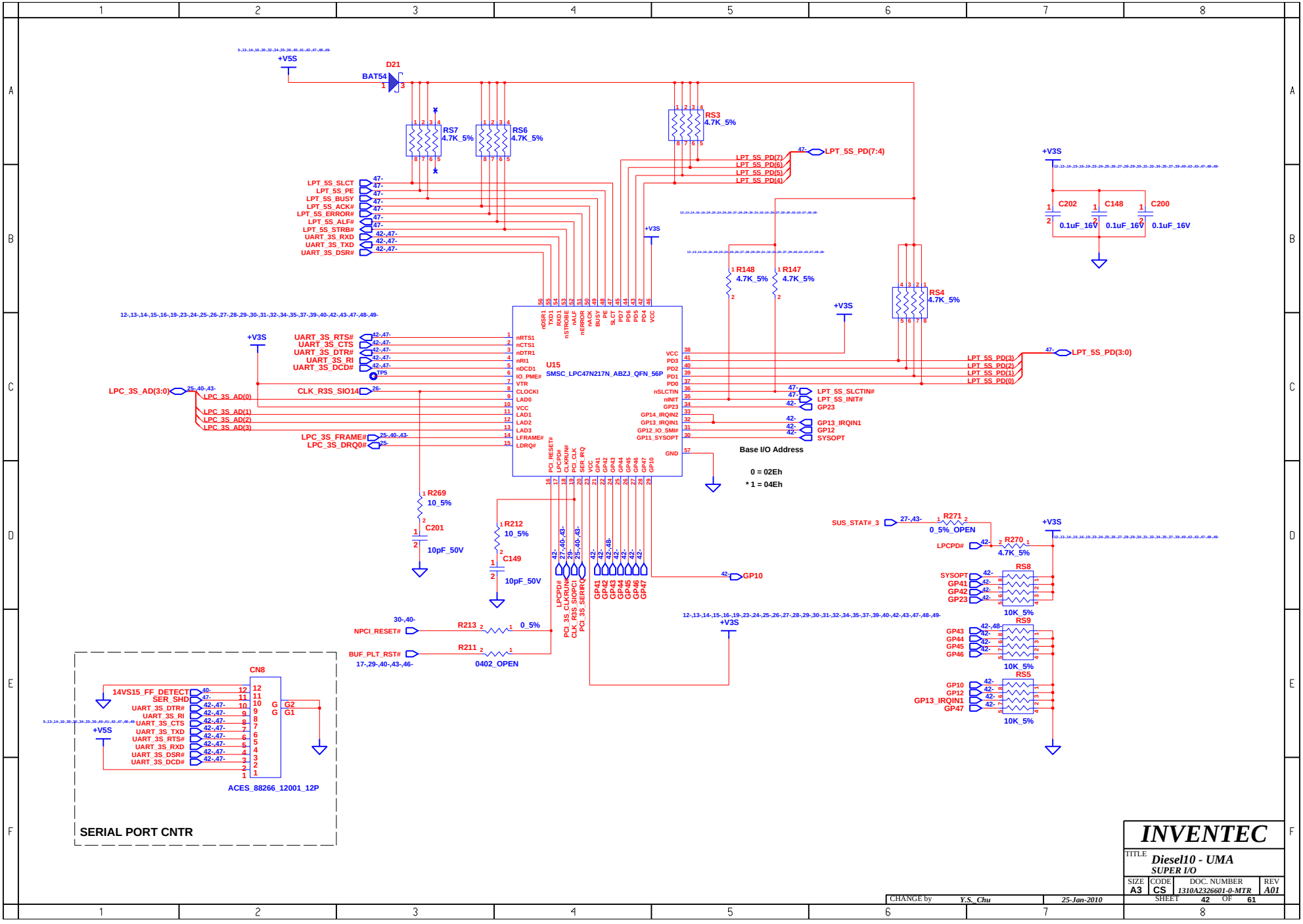

www.bufanxiu.com

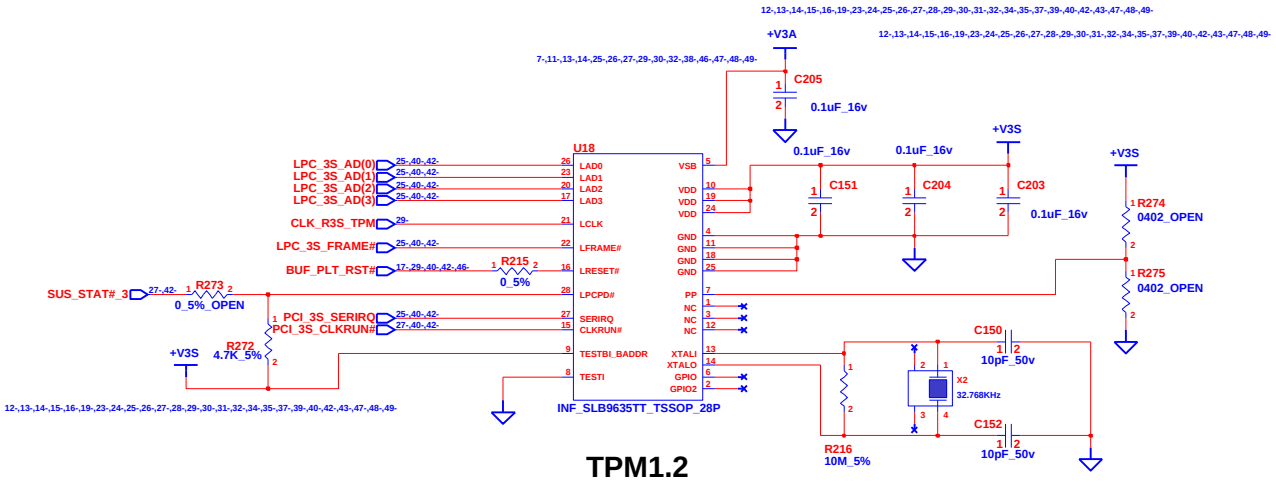

TPM1.2

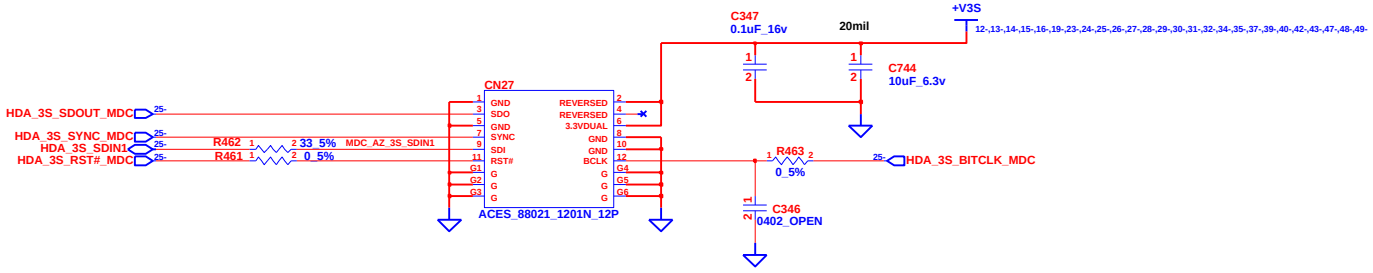

MDC CONN

INVENTEC			
TITLE	Diesel10 - UMA TPM & MDC		
SIZE A3	CODE CS	DOC. NUMBER 1310A2326601-0-MTR	REV A01
CHANGE by Y.S._Chu	25-Jan-2010	SHEET 43 OF 61	

www.bufanxiu.com

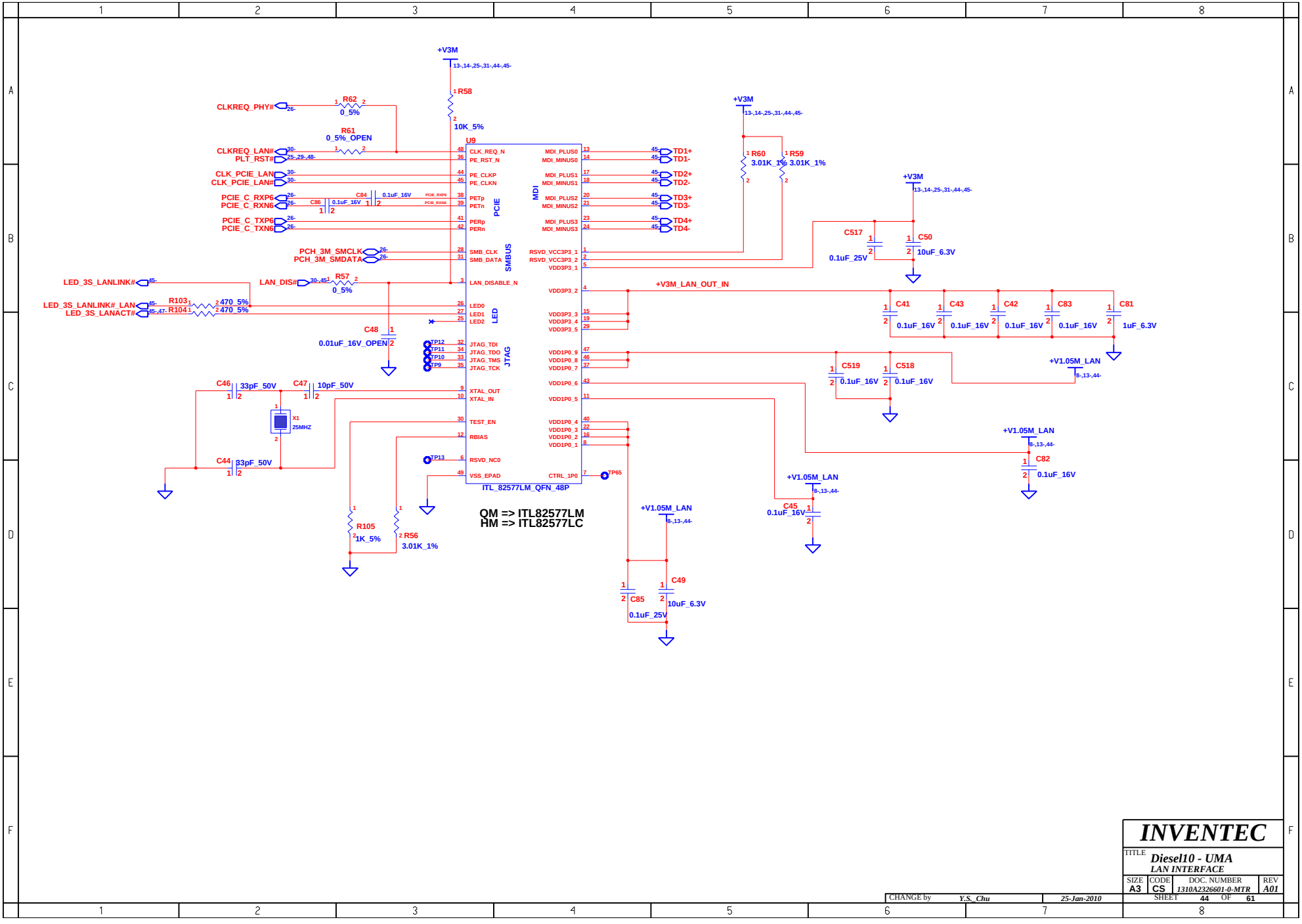

INVENTEC			
TITLE	Diesel10 - UMA LAN INTERFACE		
SIZE A3	CODE CS	DOC. NUMBER 1310A2326601-0-MTR	REV A01
CHANGE by Y.S._Chu	25-Jan-2010	SHEET 44 OF 61	

www.bufanxiu.com

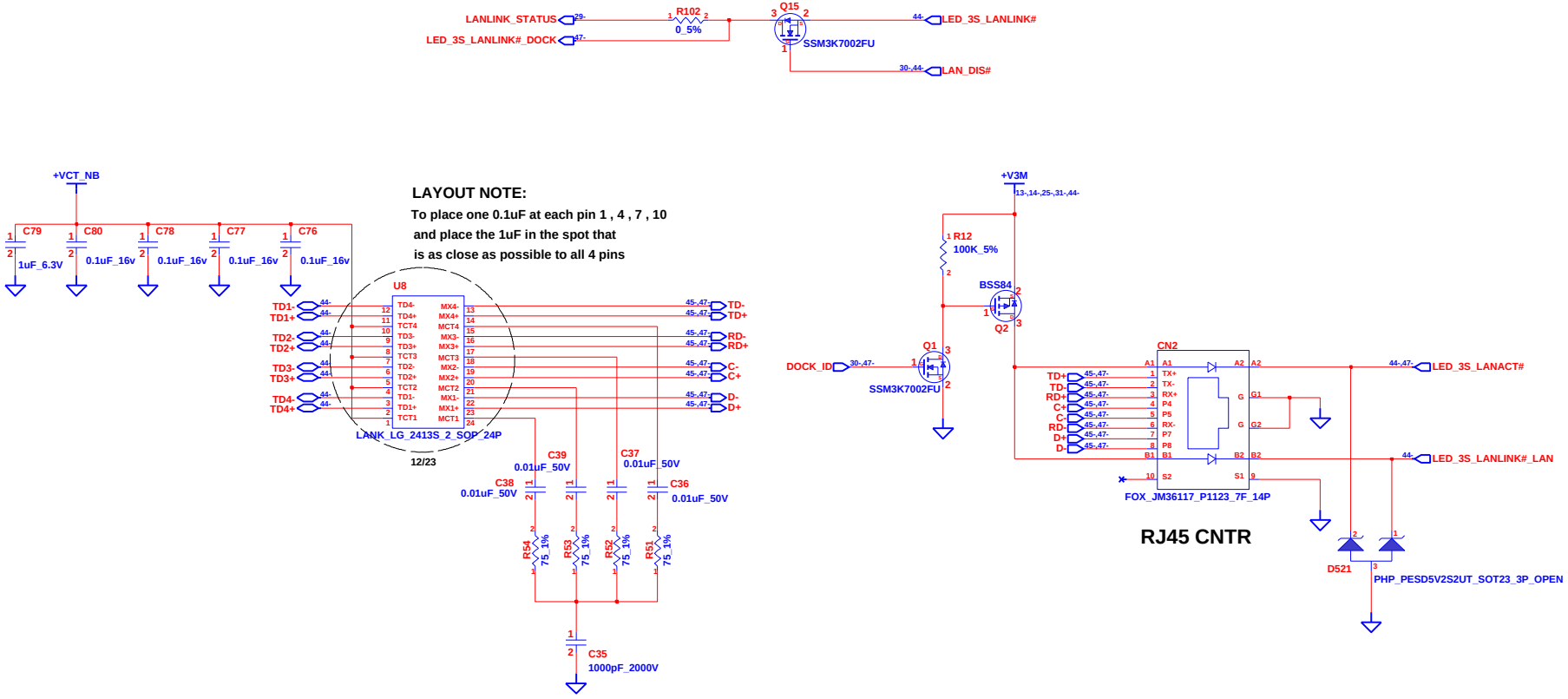

INVENTEC			
TITLE	Diesel10 - UMA LAN CNTR		
SIZE A3	CODE CS	DOC. NUMBER 1310A2326601-0-MTR	REV A01
CHANGE by Y.S._Chu	25-Jan-2010	SHEET 45 OF 61	

www.bufanxiu.com

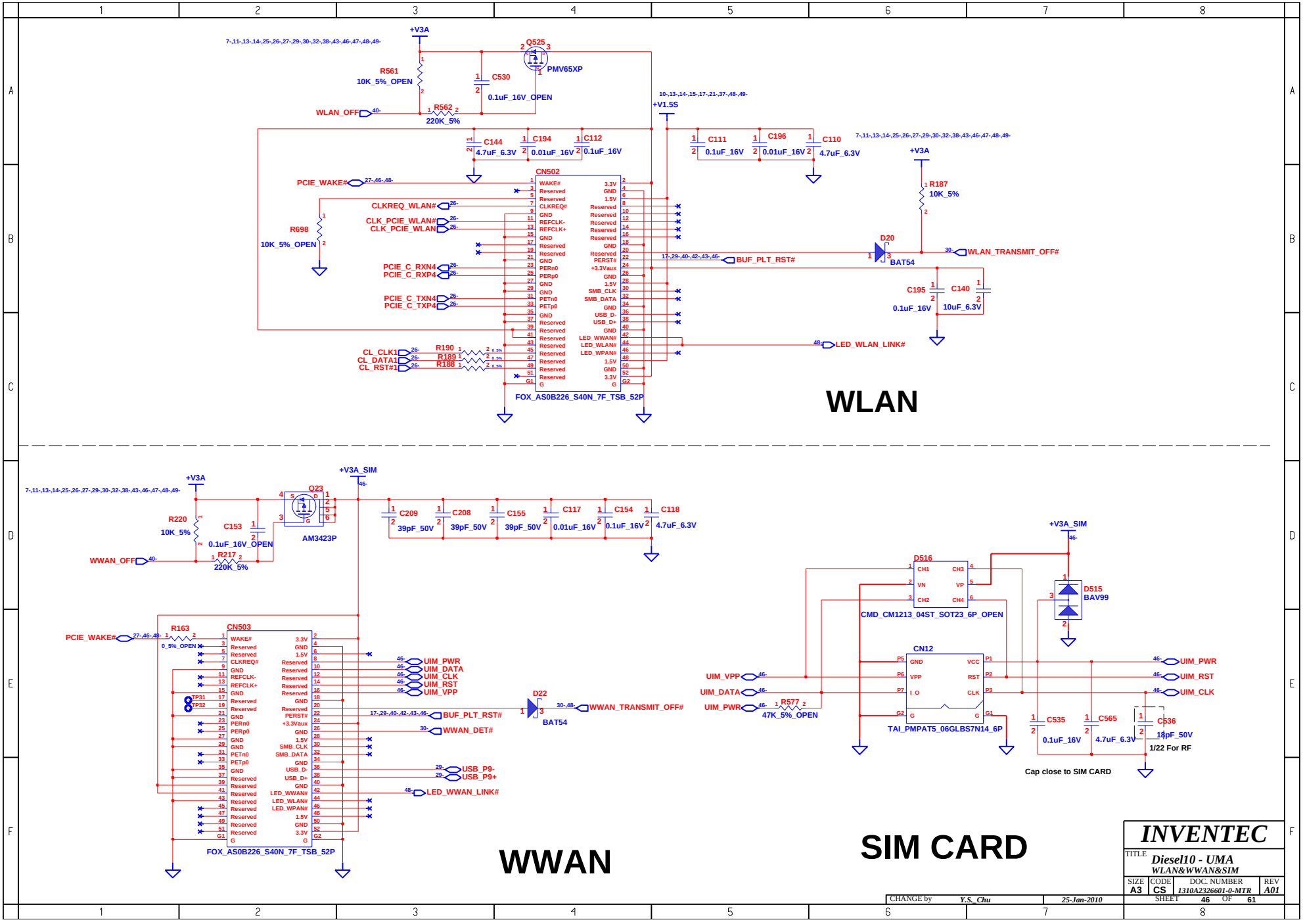

www.bufanxiu.com

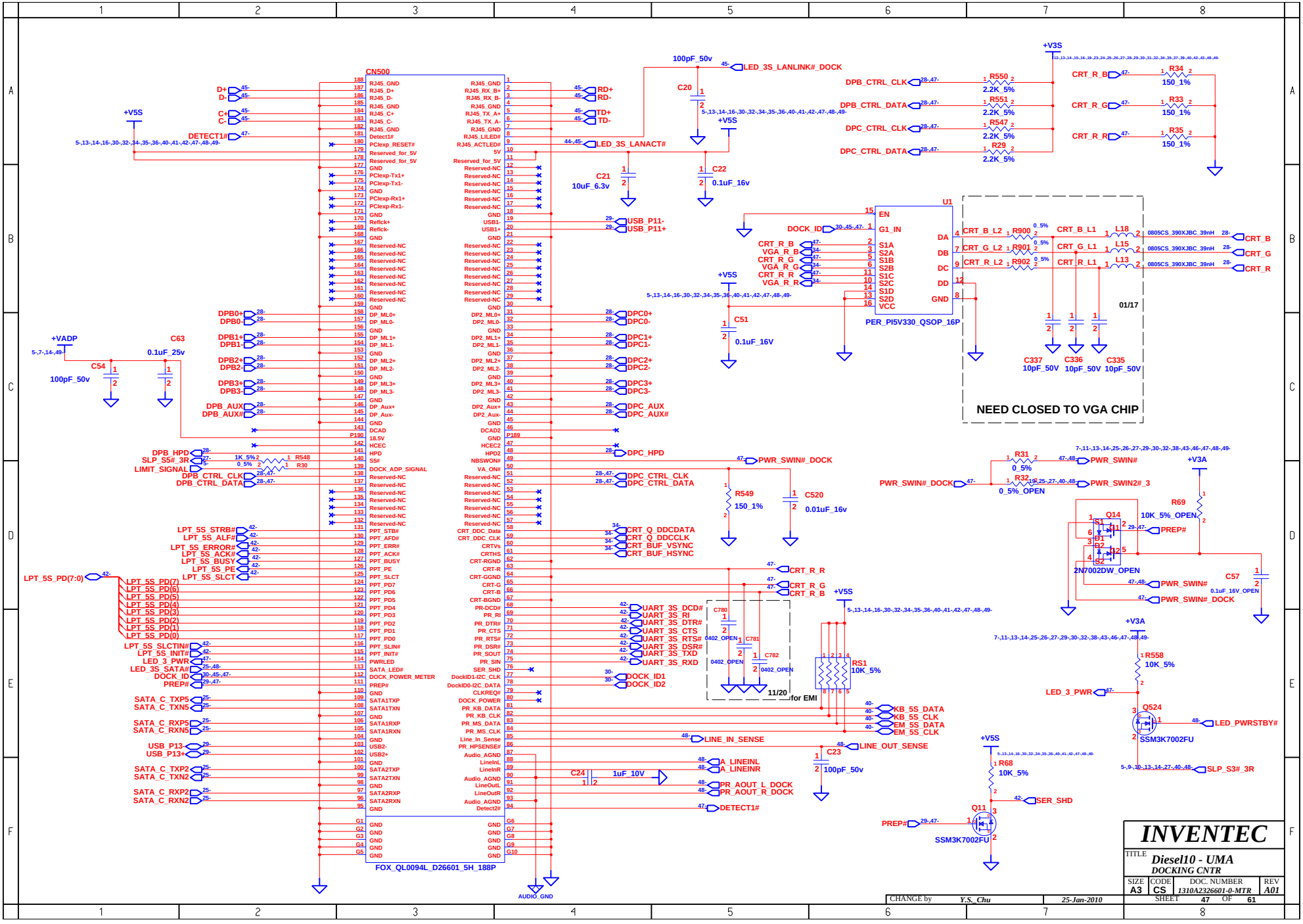

www.bufanxiu.com

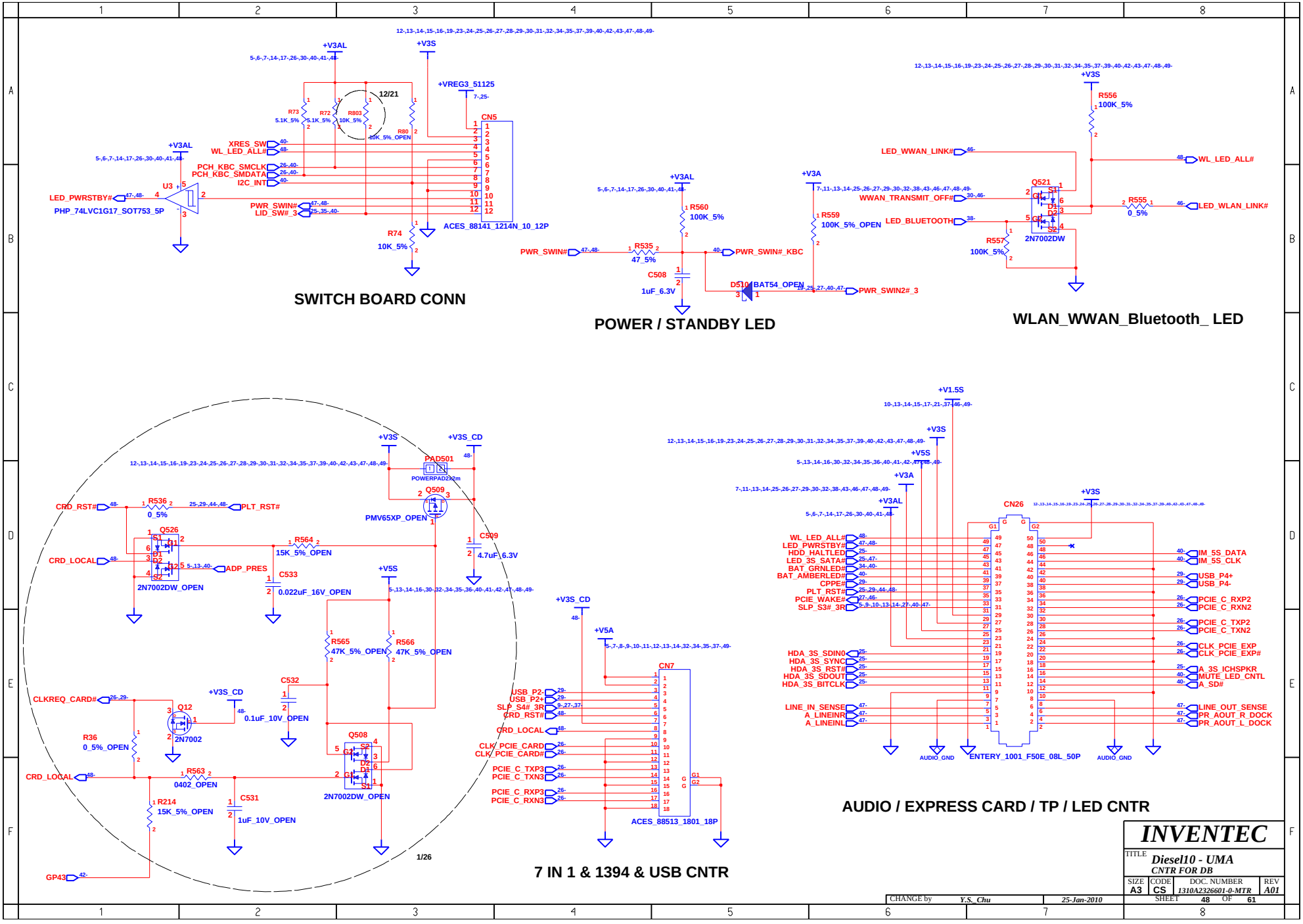

www.bufanxiu.com

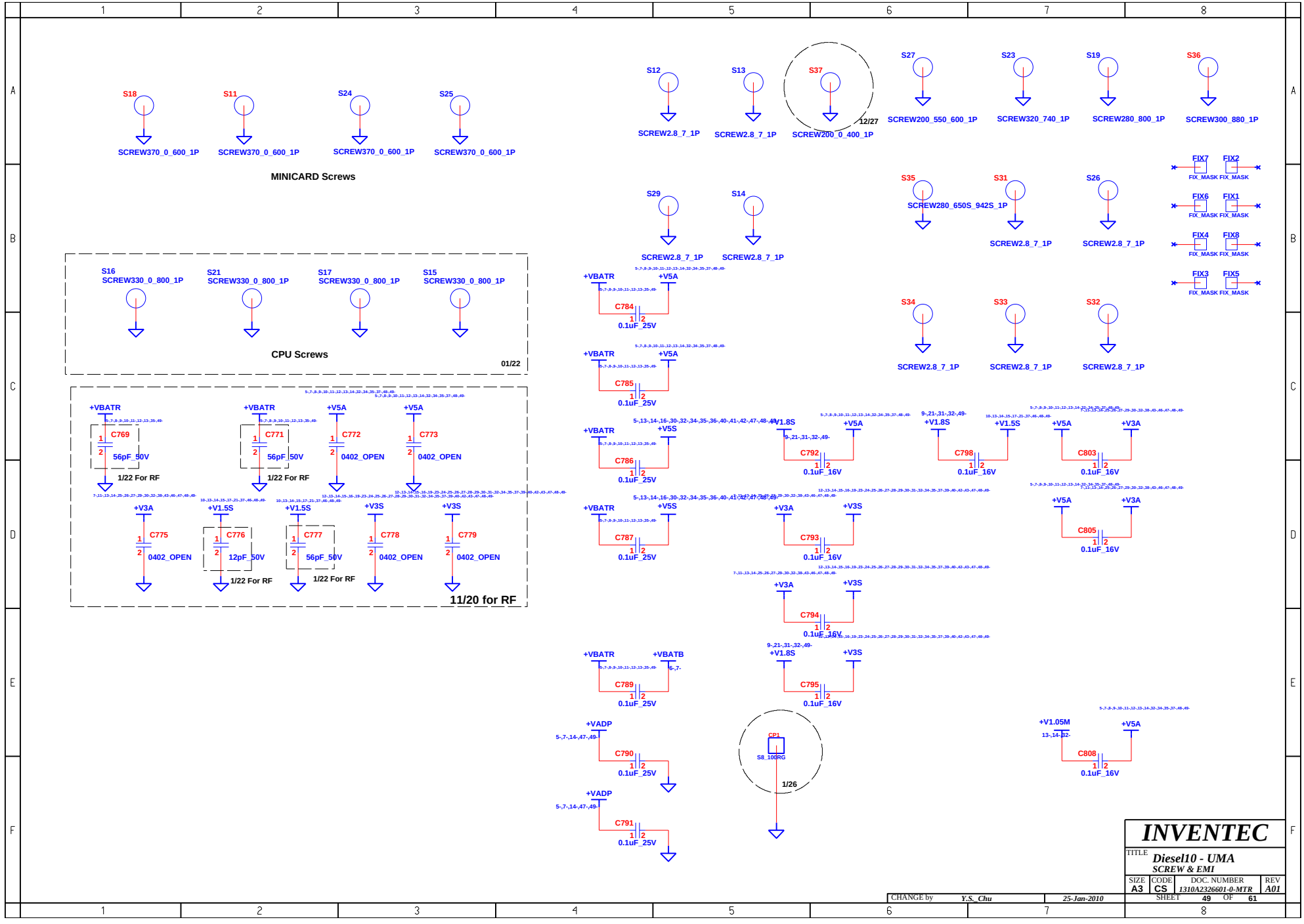

www.bufanxiu.com

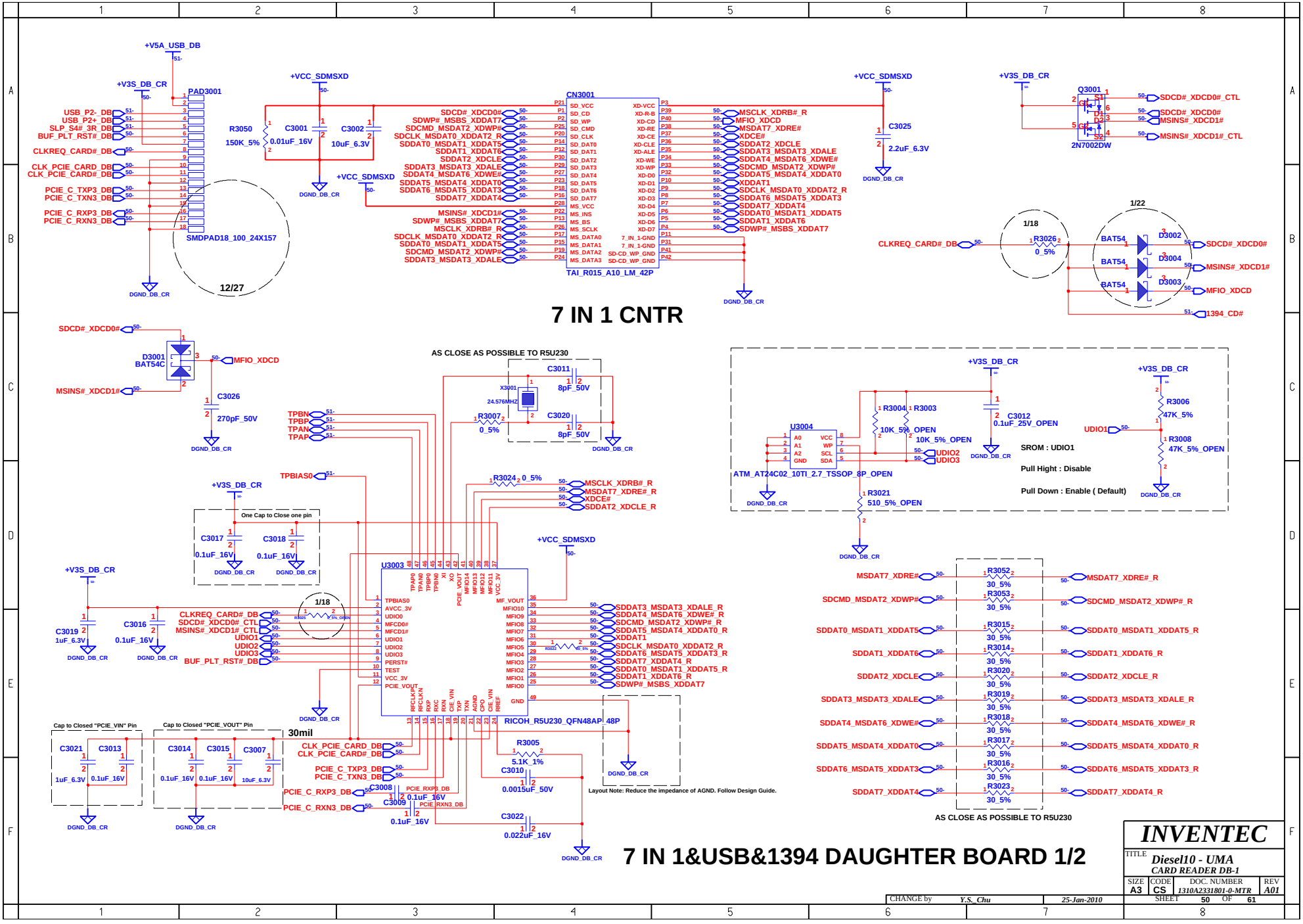

www.bufanxiu.com

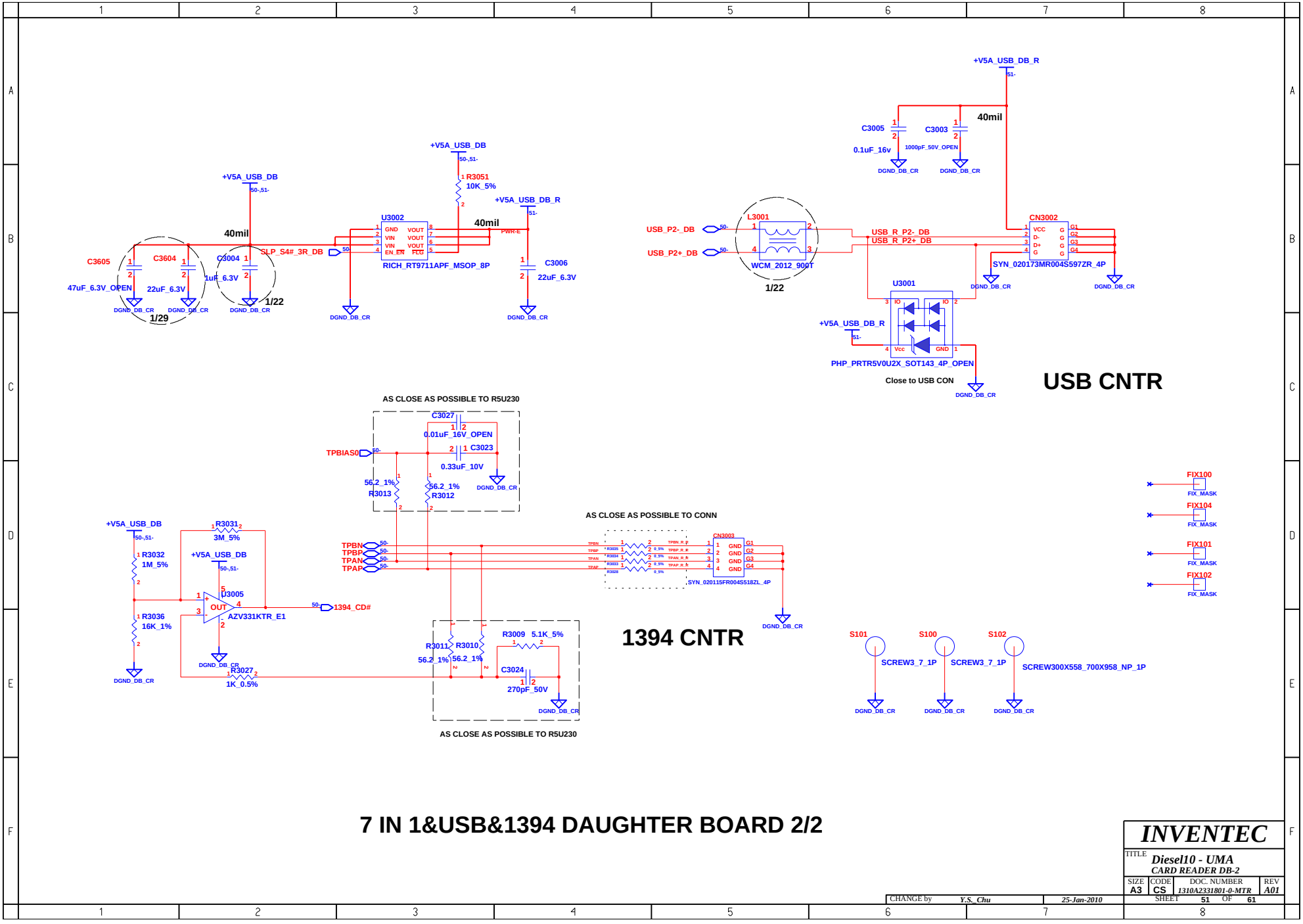

7 IN 1&USB&1394 DAUGHTER BOARD 2/2

INVENTEC			
TITLE: Diesel10 - UMA CARD READER DB-2			
SIZE: A3	CODE: CS	DOC. NUMBER: 1310A2331801-0-MTR	REV: A01
CHANGE by: Y.S._Chu	25-Jan-2010	SHEET 51 OF 61	

www.bufanxiu.com

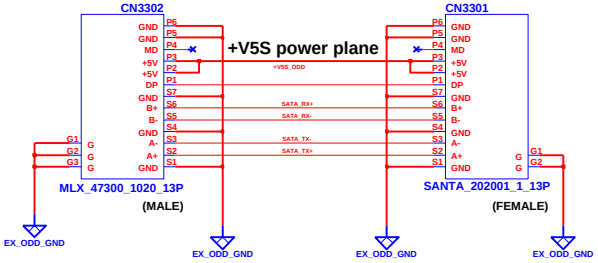

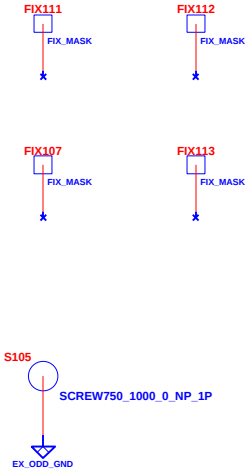

15" only

ODD Extension Board

CHANGE by	Y.S._Chu	25-Jan-2010	

INVENTEC

TITLE *Diesel10 - UMA*
ODD DB

SIZE	CODE	DOC. NUMBER	REV
A3	CS	1310A2331701-0-MTR	A01

SHEET 52 OF 61

www.bufanxiu.com

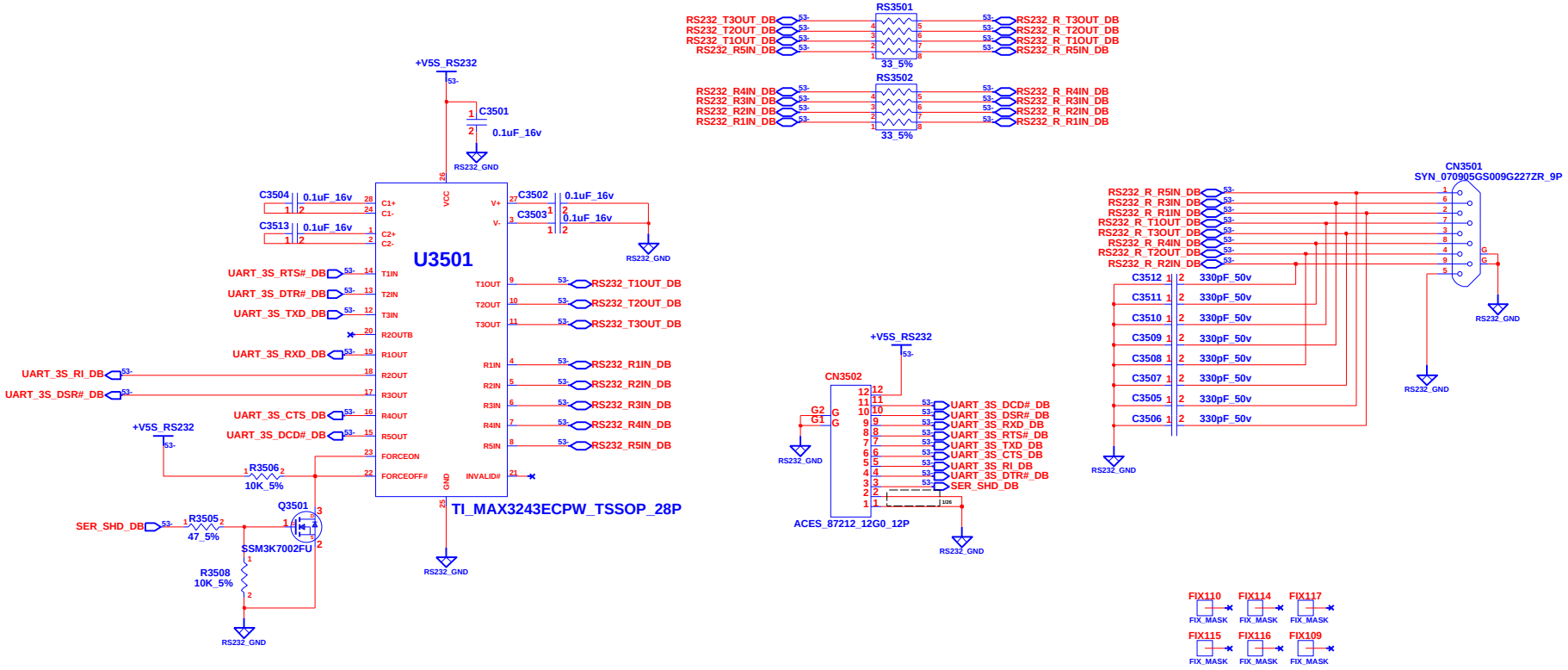

SERIAL BOARD 15" ONLY

INVENTEC			
TITLE Diesel10 - UMA SERIAL DB			
SIZE A3	CODE CS	DOC. NUMBER 1310A2331501-0-MTR	REV A01
CHANGE by Y.S._Chu	26-Jan-2010	SHEET 53 OF 61	

www.bufanxiu.com

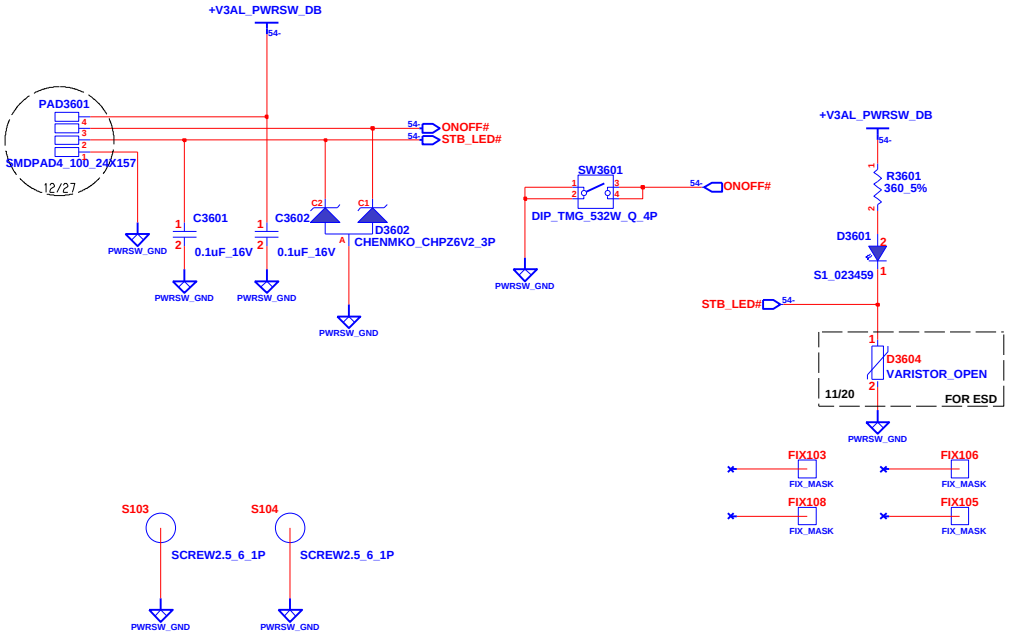

POWER SWITCH DAUGHTER BOARD

CHANGE by	Y.S._Chu	25-Jan-2010	

INVENTEC

TITLE: *Diesel10 - UMA*
POWER BUTTON DB

SIZE	CODE	DOC. NUMBER	REV
A3	CS	1310A2331401-0-MTR	A01

SHEET 54 OF 61

www.bufanxiu.com

WIRELESS LED

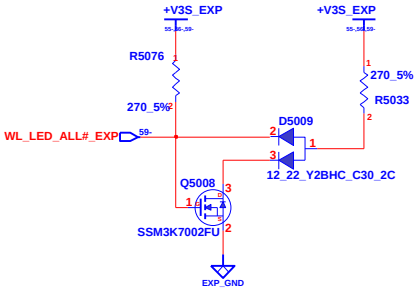

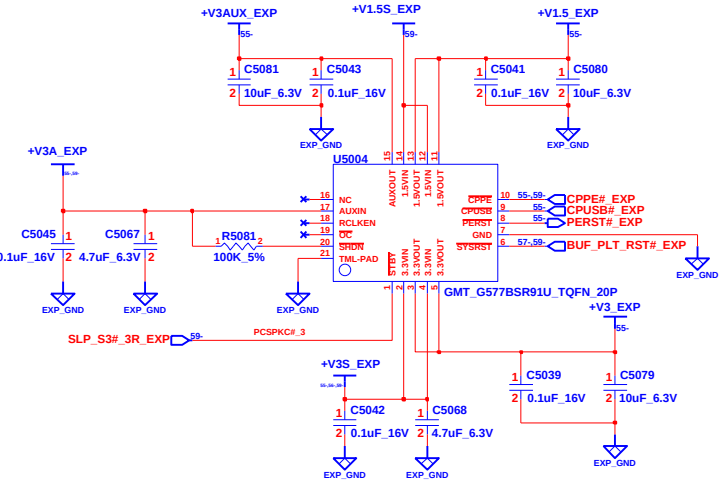

POWER LED

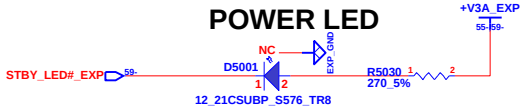

BATTERY LED

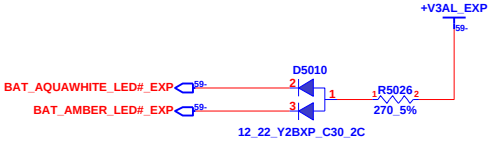

SATA LED & HDD-HALTED LED

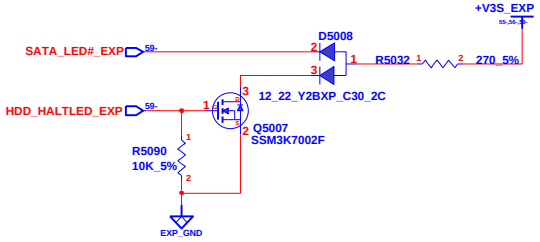

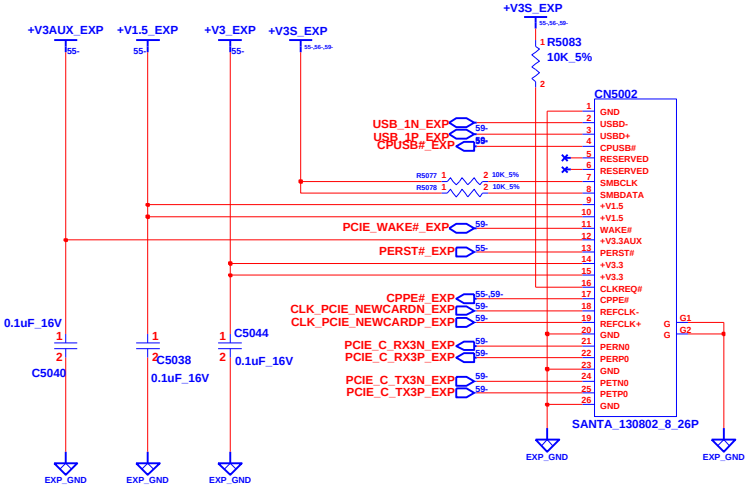

EXPRESS CARD

INVENTEC			
TITLE	Diesel10 - UMA EXPRESS CARD & AUDIO DB - 1		
SIZE A3	CODE CS	DOC. NUMBER 1310A2331601-0-MTR	REV A01
CHANGE by Y.S._Chu	25-Jan-2010	SHEET 55 OF 61	

www.bufanxiu.com

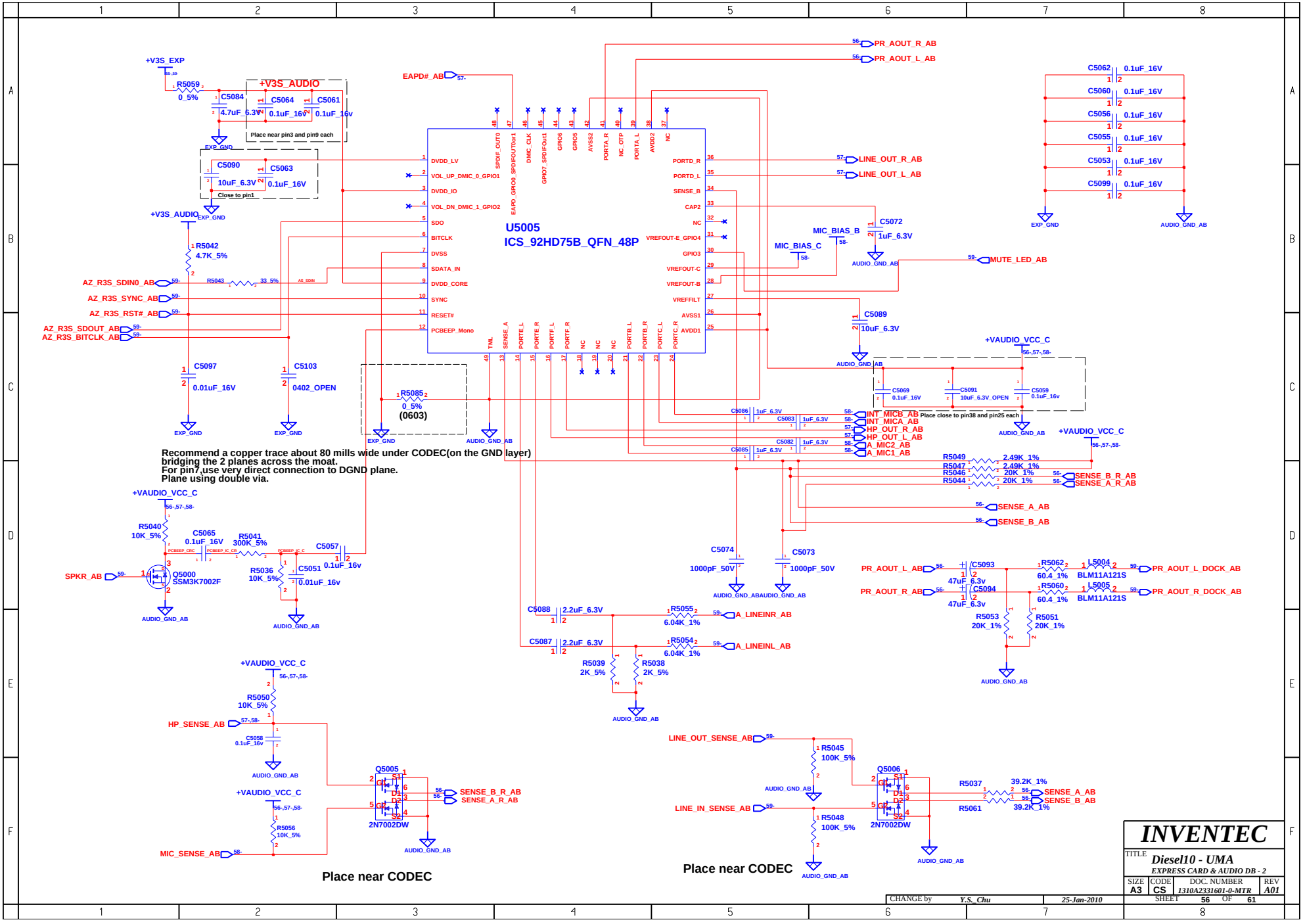

www.bufanxiu.com

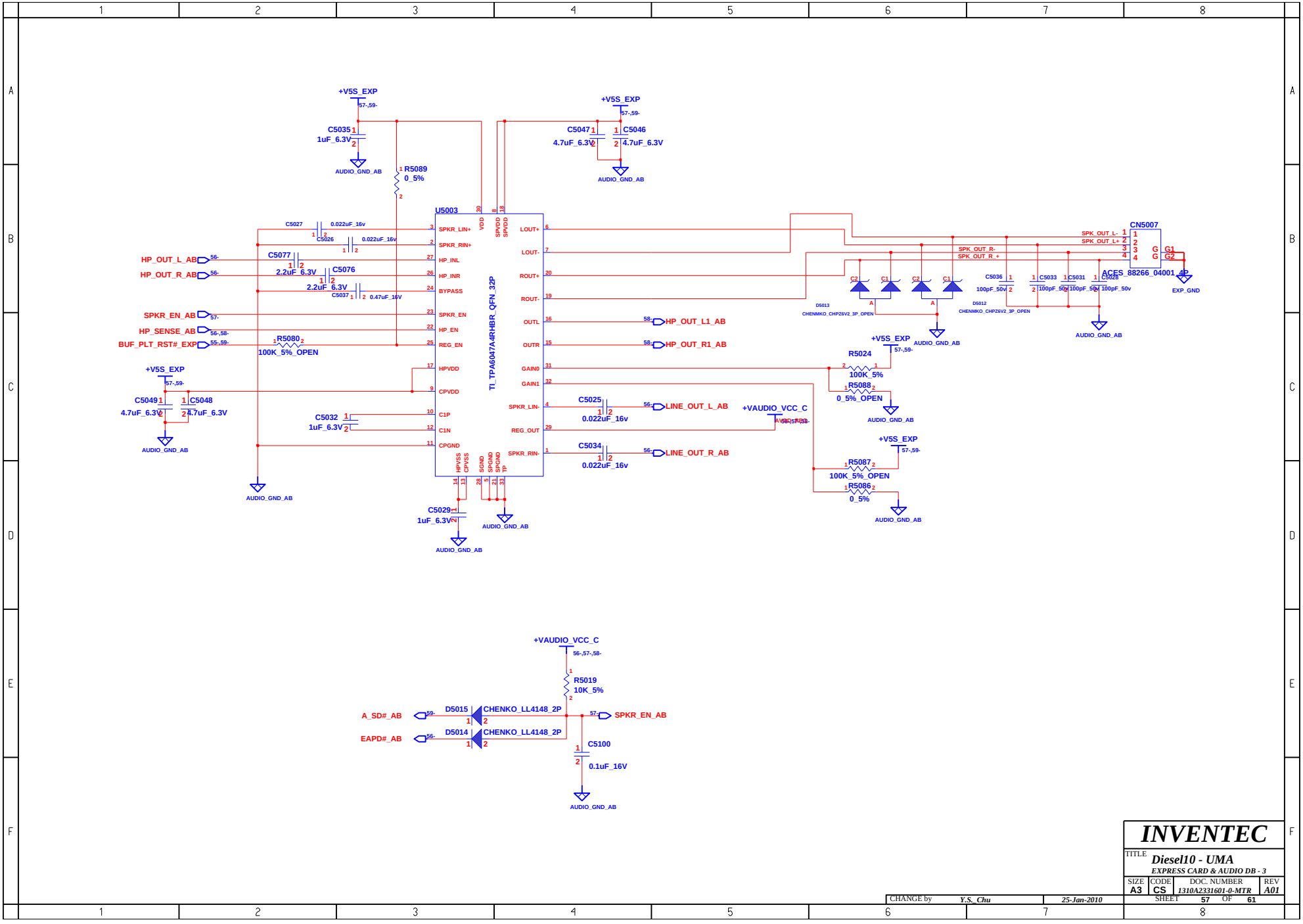

CHANGE by	Y.S._Chu	25-Jan-2010	

INVENTEC

TITLE: *Diesel10 - UMA*

EXPRESS CARD & AUDIO DB - 3

SIZE	CODE	DOC. NUMBER	REV
A3	CS	1310A2331601-0-MTR	A01

SHEET 57 OF 61

www.bufanxiu.com

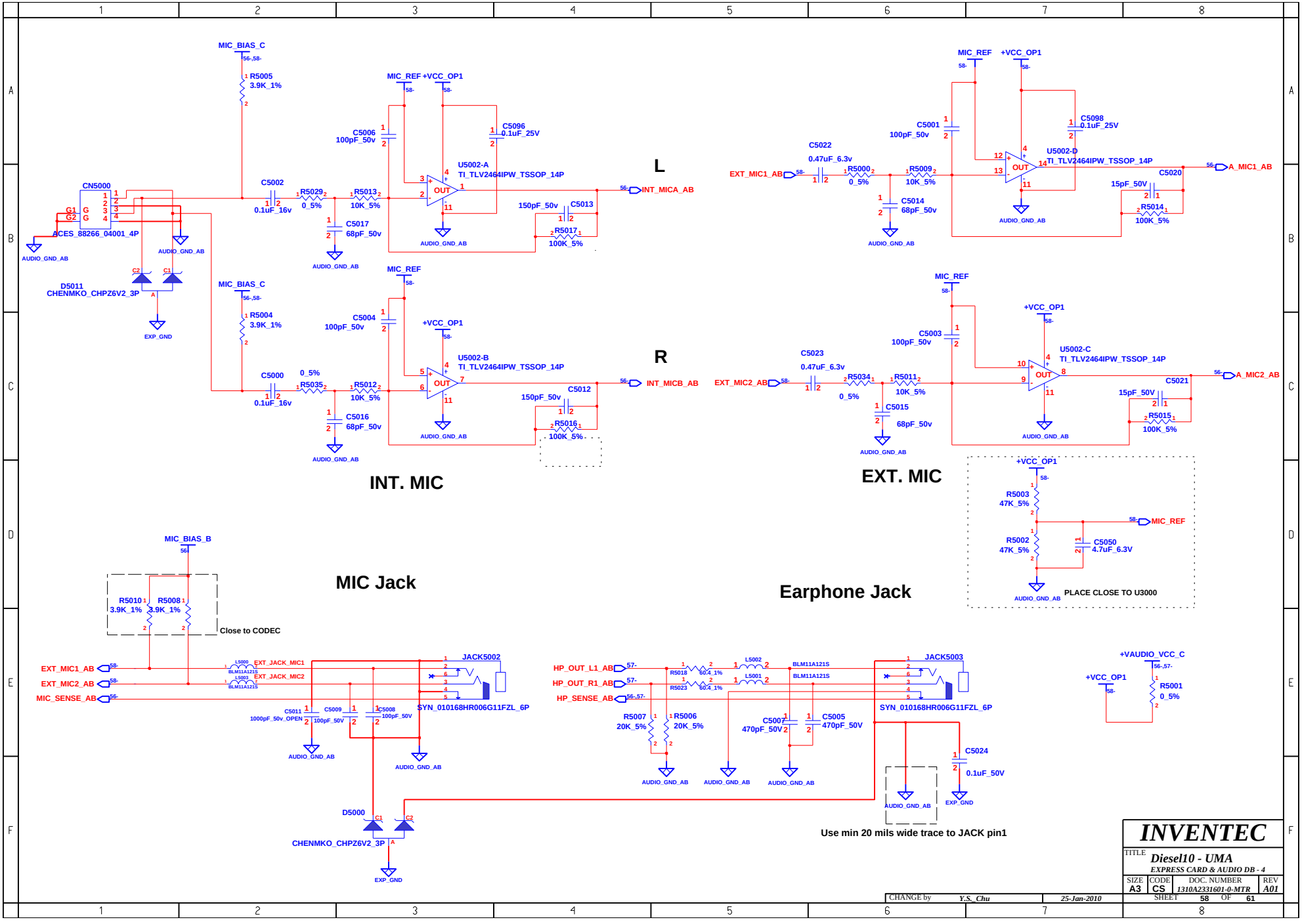

www.bufanxiu.com

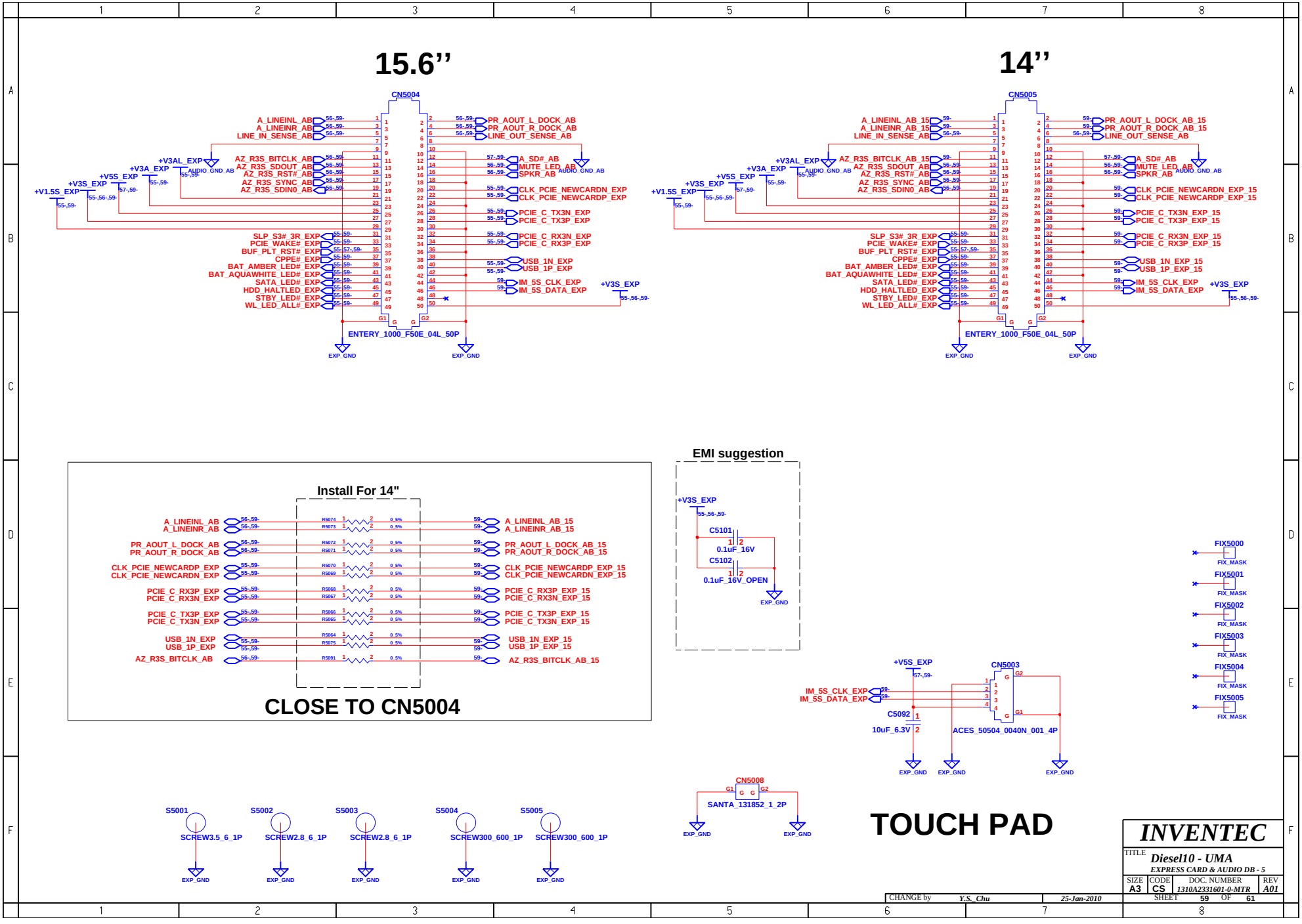

www.bufanxiu.com

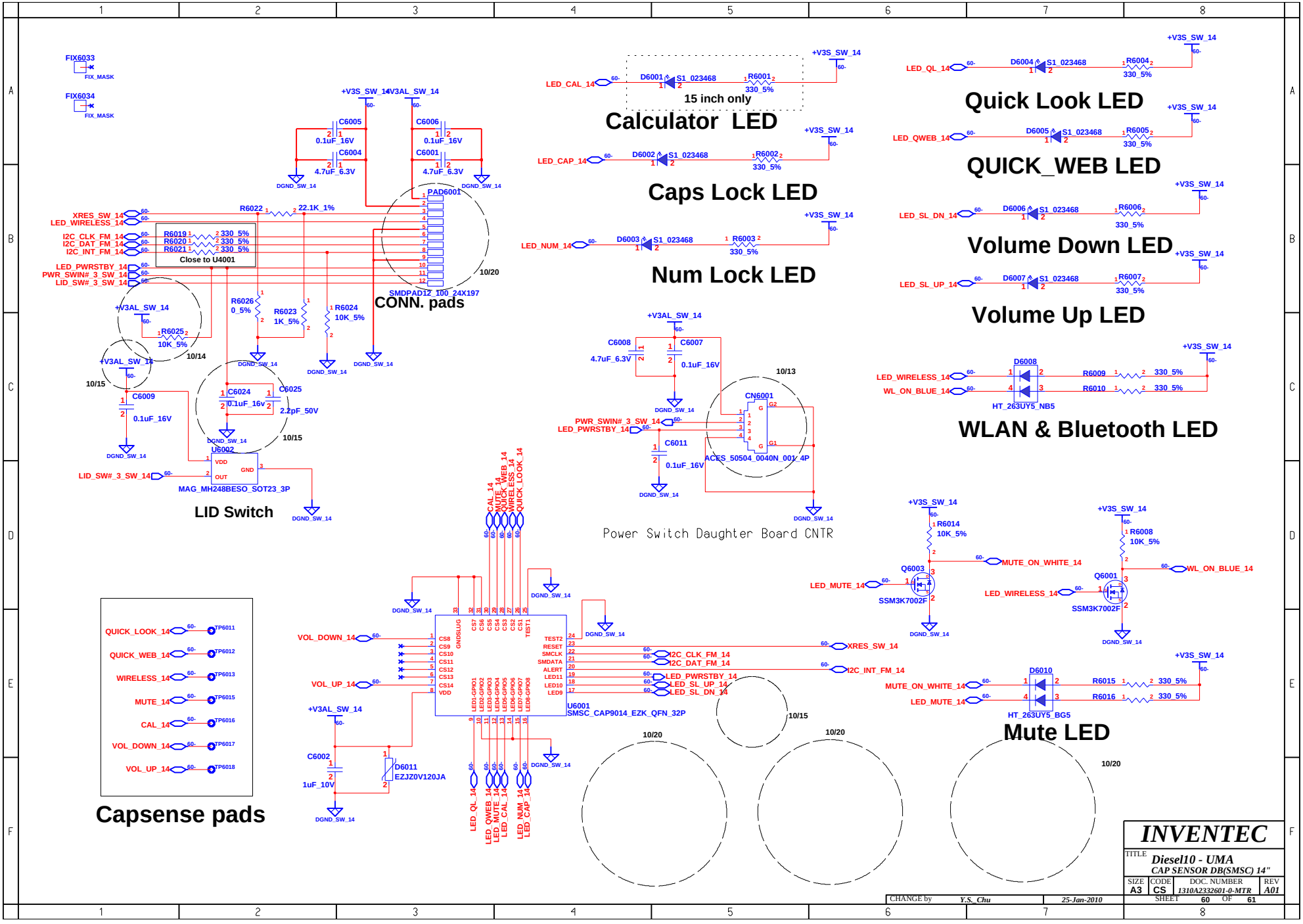
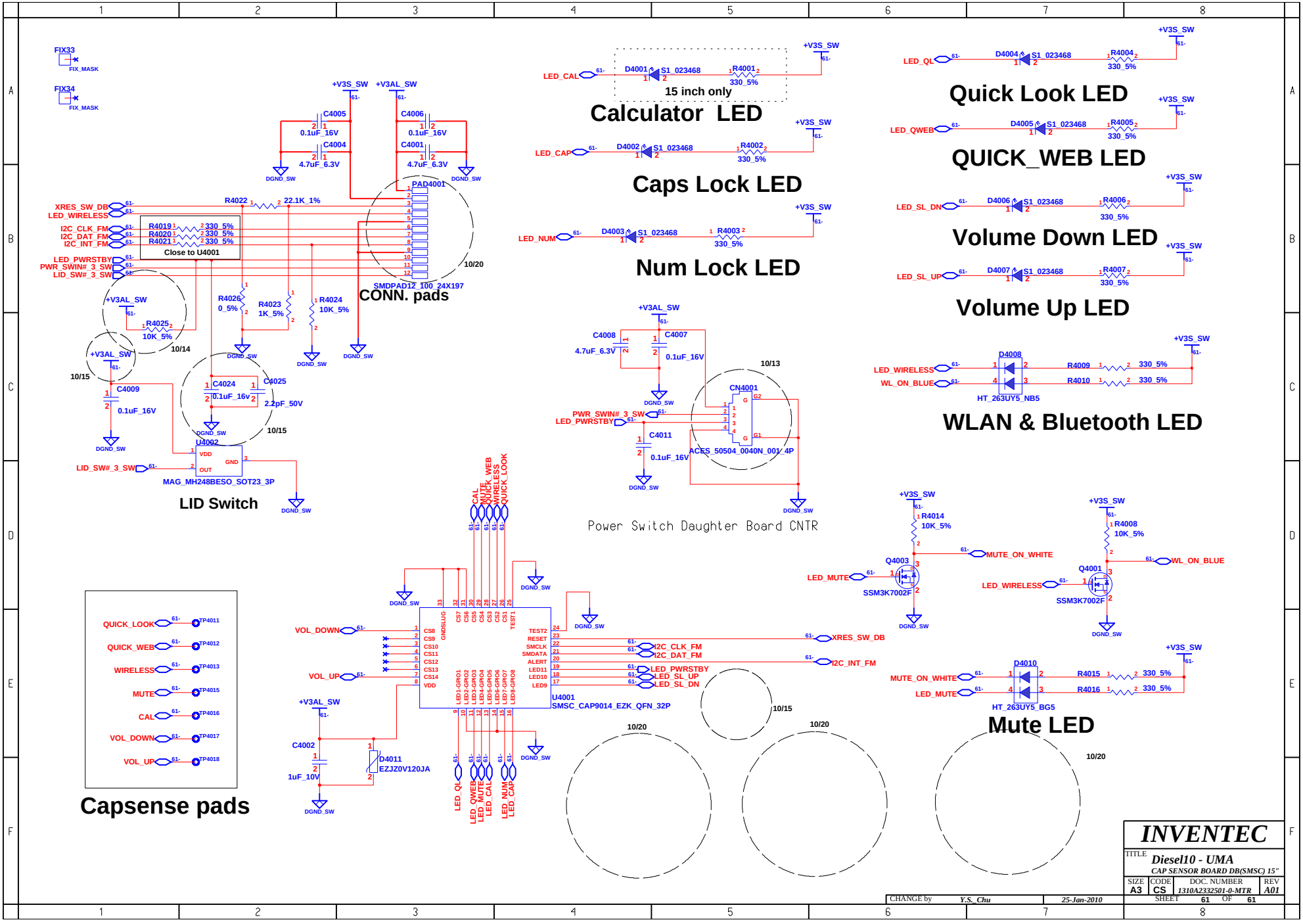
www.bufanxiu.com